Chapter B

Mechanical Linear Drive

HSB-beta®

with toothed belt drive and sliding guide (ZGS) or rail guide (ZSS)

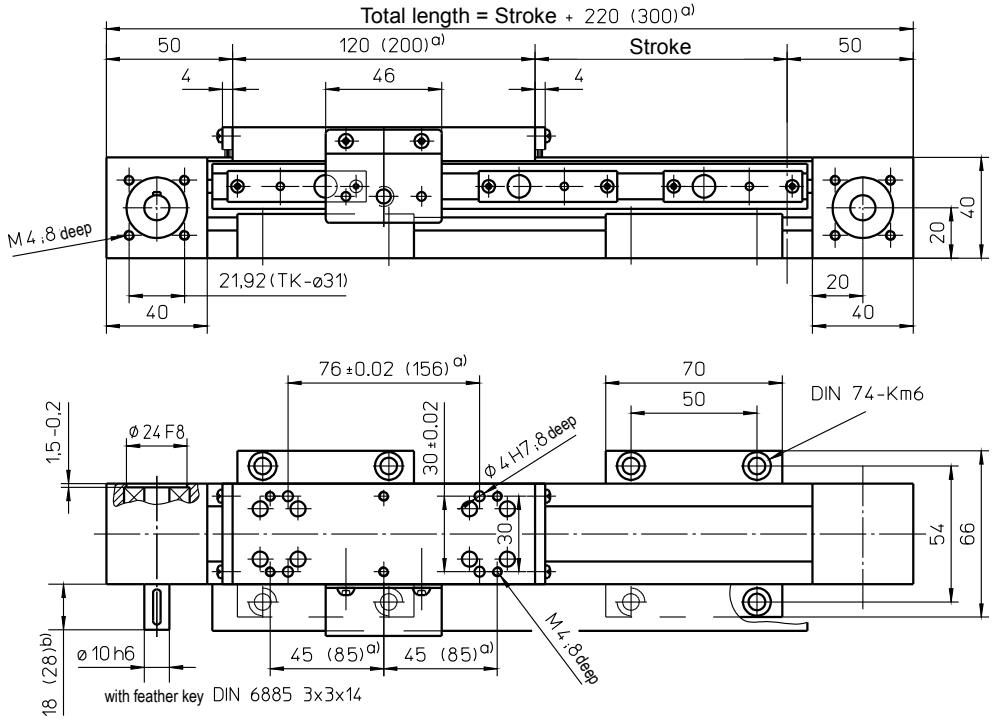

a) Data in brackets refer to long carriage

b) Data in brackets refer to version GX

Weights	ZGS	ZSS
Basic length without stroke:	1.50 kg	1.70 kg
100 mm stroke:	0.20 kg	0.30 kg
Entire carriage 120 mm:	0.30 kg	
Entire carriage 200 mm:	0.50 kg	
Max. total length:	3000 mm	2070 mm

Technical Data	ZGS	ZSS
Max. speed:	1.00 m/s	3.00 m/s
Max. acceleration:	20 m/s²	30 m/s²
Repeat accuracy:	± 0.08 mm	
Idle torque:	0.30 Nm	
Moment of inertia:	2.00 •10^{-4} kgm²	
Drive element:	Toothed belt **16 AT5-E**	
Stroke per revolution:	100 mm	

Forces and moments

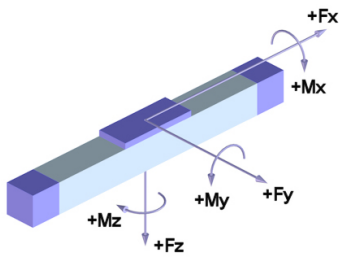

	ZGS	ZSS
Forces	Dynamic [N]	
F_x d)	500	
F_Y	80	500
F_Z	150	600
$-F_Z$	75	300
Moments	Dynamic [Nm]	
M_X	6	12
M_Y	6	30 (50)
M_Z	8	30 (50)

d) Maximum value (see diagram "F_X-v-Diagram")
Data in brackets refer to long carriage (200)

F_X - v - Diagram

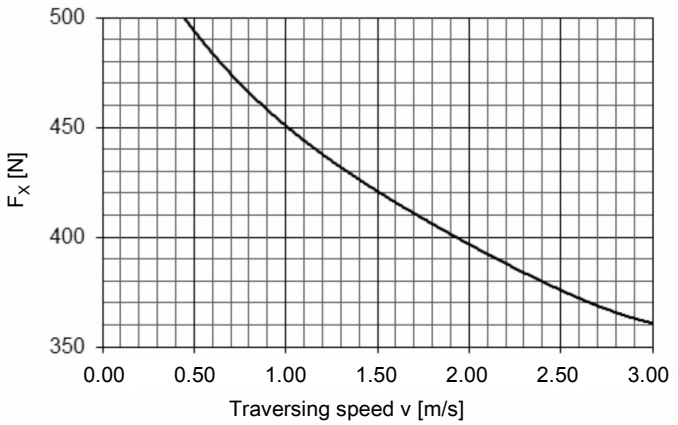

>> Note << Drive shaft is not changeable

Please define position, e.g. "AZ1"! (See Ordering Code)

with ball screw (KGT) and sliding guide (SGS) or rail guide (SSS)

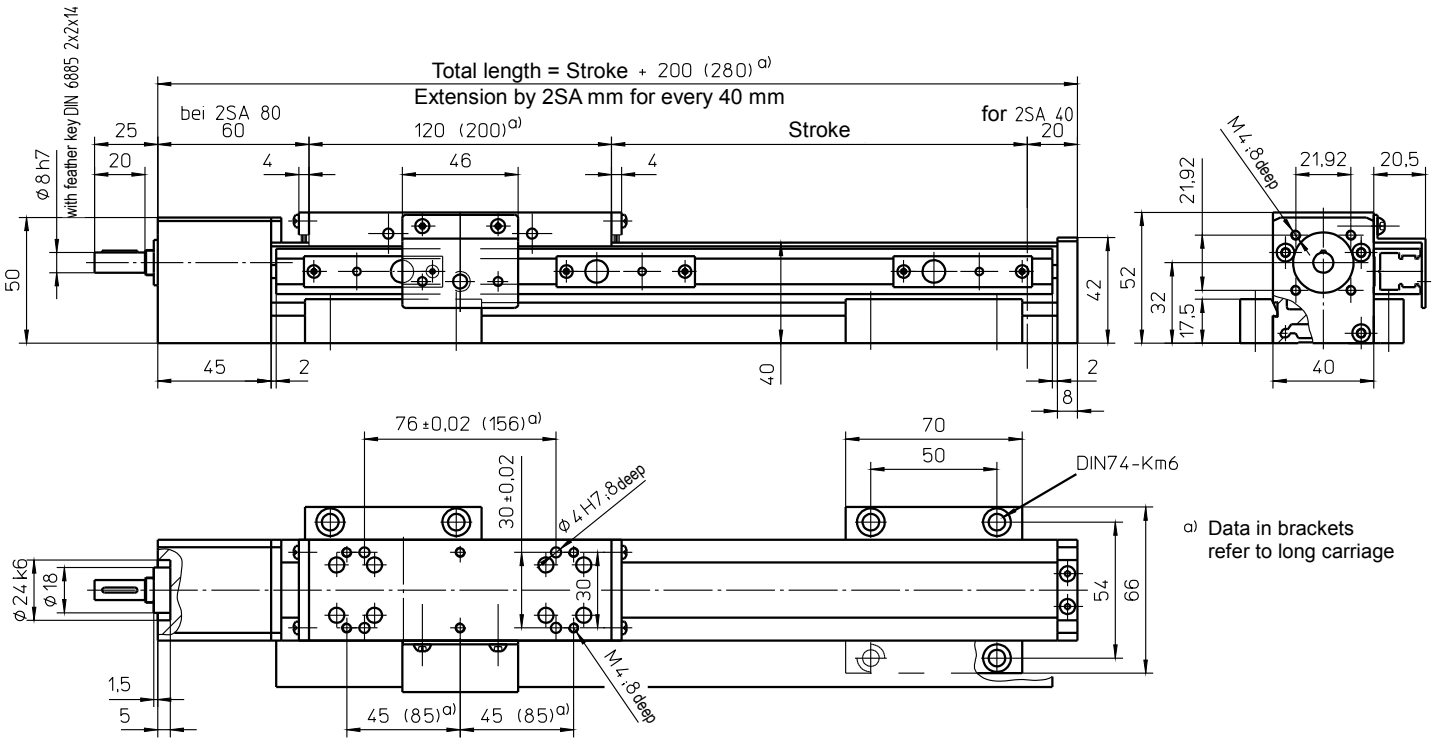

a) Data in brackets refer to long carriage

Weights	SGS	SSS
Basic length without stroke:	1.50 kg	1.70 kg
100 mm stroke:	0.30 kg	0.40 kg
Entire carriage 120 mm:	0.30 kg	0.40 kg
Entire carriage 200 mm:	0.50 kg	0.65 kg

Max. total length: 2040 mm

Technical Data	SGS	SSS
Max. speed:	0.5 m/s	
Max. acceleration:	20 m/s²	
Repeat accuracy:	± 0.03 mm (KGT)	
Idle torque:	0.30 Nm	0.4 Nm

Forces and moments

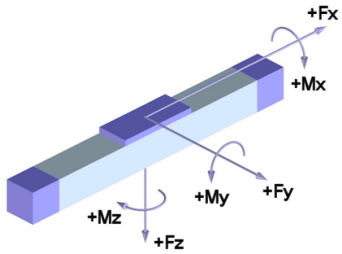

	SGS	SSS
Forces	Dynamic [N]	
F_X	1000	
F_Y	80	500
F_Z	150	600
$-F_Z$	75	300
Moments	Dynamic [Nm]	
M_X	6	12
M_Y	6	30 (50)
M_Z	8	30 (50)

Data in brackets refer to long carriage (200)

Drive element	KGT
Max. rotation speed:	3000 min^{-1}
Diameter:	12 mm
Pitch:	5 / 10 mm
Moment of inertia:	1.20 •10^{-5} kgm²/m

Spindle support (SA) (only available with SSS)

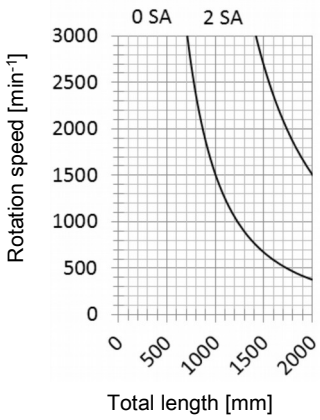

Special design: Spindle support with damping ring (extension of total length: 10 mm for every 2 SA)

with toothed belt drive and roller guide (ZRS)

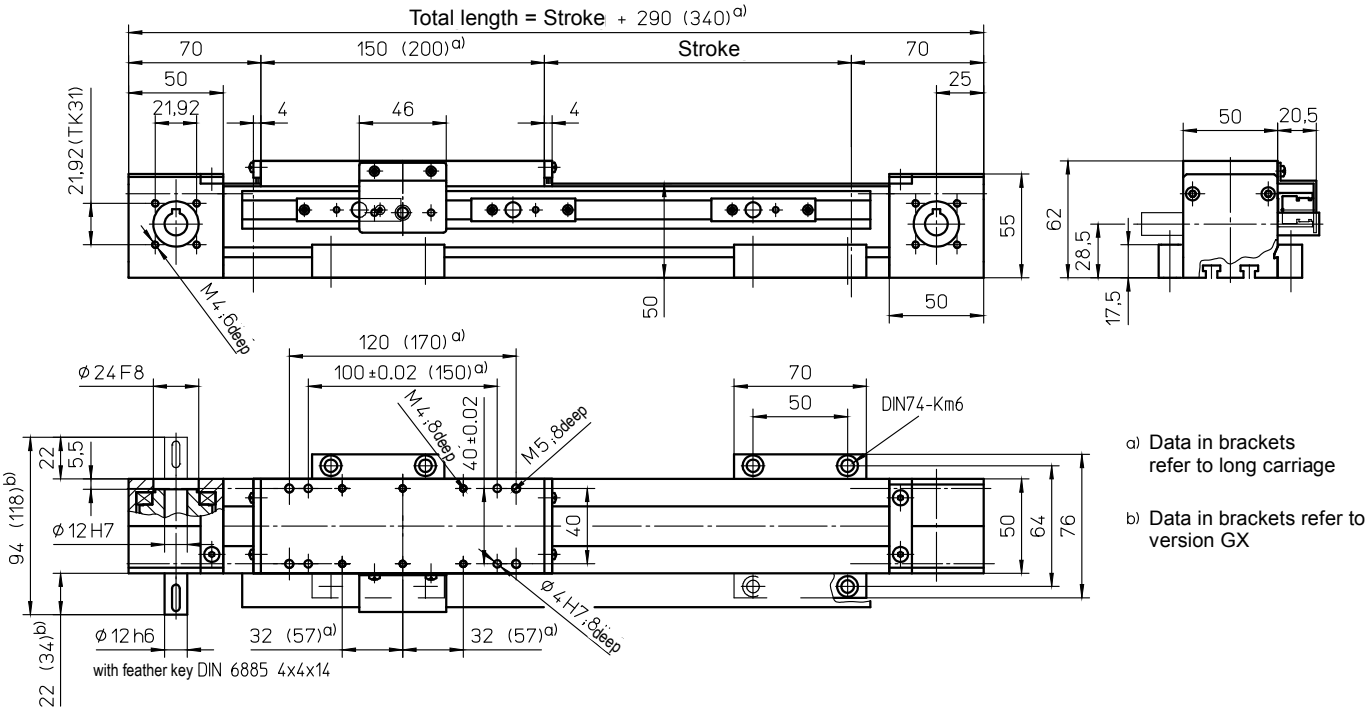

a) Data in brackets refer to long carriage

b) Data in brackets refer to version GX

Weights	ZRS
Basic length without stroke:	1.45 kg
100 mm stroke:	0.35 kg
Entire carriage 150 mm:	0.45 kg
Entire carriage 200 mm:	0.60 kg
Max. total length: (longer on request)	8000 mm

Technical Data	ZRS
Max. total speed:	3.00 m/s
Max. acceleration:	30 m/s²
Repeat accuracy:	± 0.08 mm
Idle torque:	0.40 Nm
Moment of inertia:	3.00 •10^{-4} kgm²
Drive element:	Toothed belt **20 AT5-E**
Stroke per revolution:	110 mm

Forces and moments

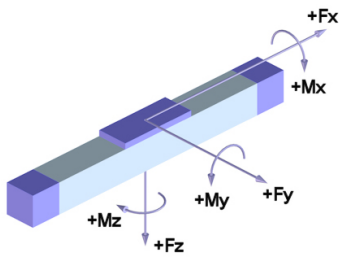

	ZRS
Forces	Dynamic [N]
F_x d)	700
F_Y	300
F_Z	600
$-F_Z$	400
Moments	Dynamic [Nm]
M_X	30
M_Y	50 (65)
M_Z	50 (65)

d) Maximum value (see diagram "F_X-v-Diagram")
Data in brackets refer to long carriage (200)

F_X - v - Diagram

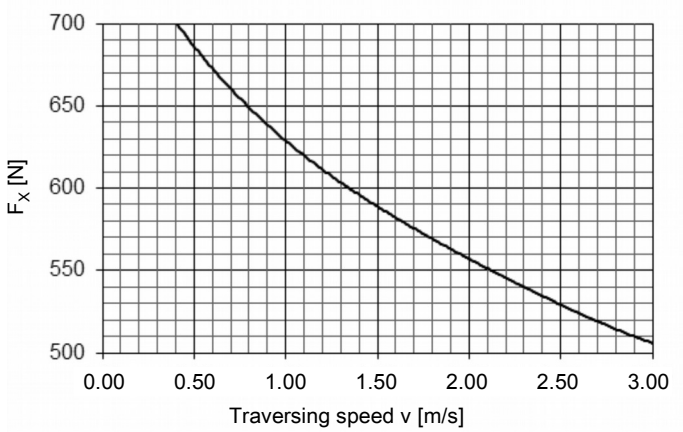

For mechanical linear drives with roller guide,
the static load rating "C_{stat}" applies for static loads.

Release: 20.02.2015

with toothed belt drive and roller guide (ARS)

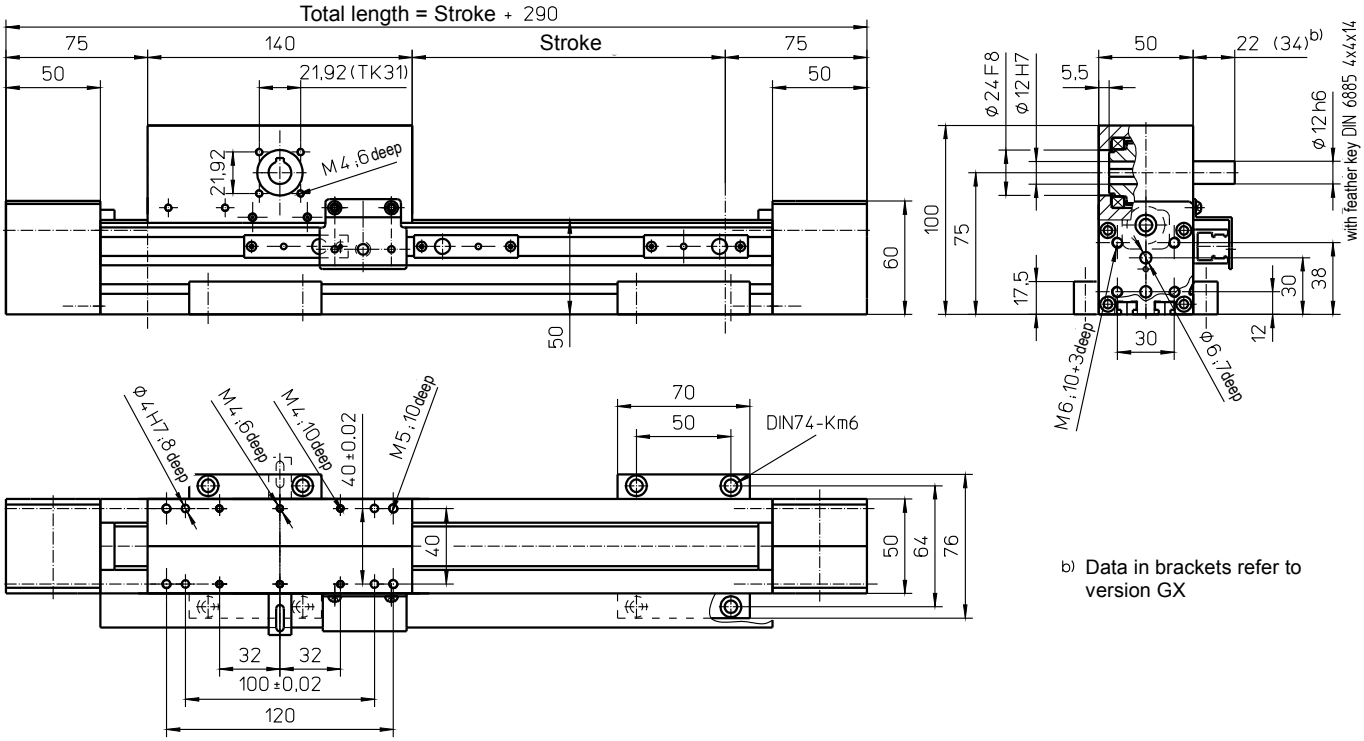

b) Data in brackets refer to version GX

Weights	ARS
Basic length without stroke:	3.10 kg
100 mm stroke:	0.30 kg
Carriage drive 140 mm:	2.80 kg
Max. total length: (longer on request)	8000 mm

Technical Data	ARS
Max. speed:	3.00 m/s
Max. acceleration:	30 m/s²
Repeat accuracy:	± 0.08 mm
Idle torque:	1.50 Nm
Moment of inertia:	3.00 •10^{-4} kgm²
Drive element:	Toothed belt **20 AT5-E**
Stroke per revolution:	110 mm

Forces and moments

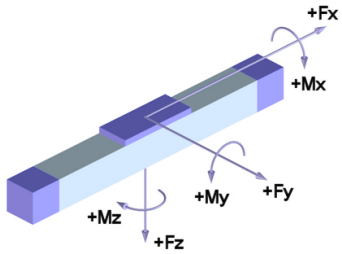

	ARS
Forces	Dynamic [N]
F_X d)	700
F_Y	300
F_Z	600
$-F_Z$	400
Moments	Dynamic [Nm]
M_X	30
M_Y	50
M_Z	50

d) Maximum value (see diagram "F_X-v-Diagram")

F_X - v - Diagram

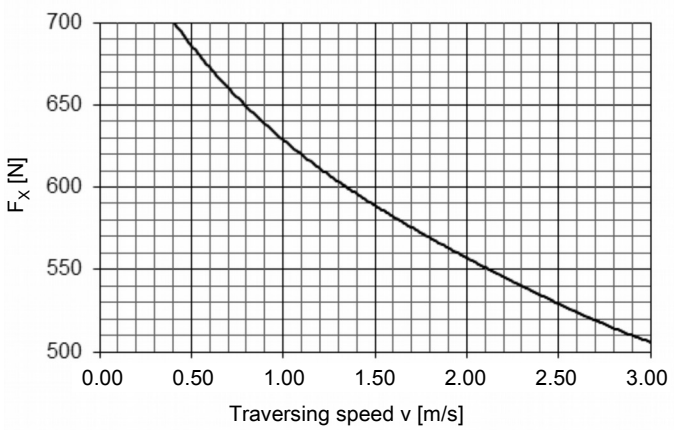

For mechanical linear drives with roller guide, the static load rating "C_{stat}" applies for static loads.

with ball screw (KGT) and roller guide (SRS)

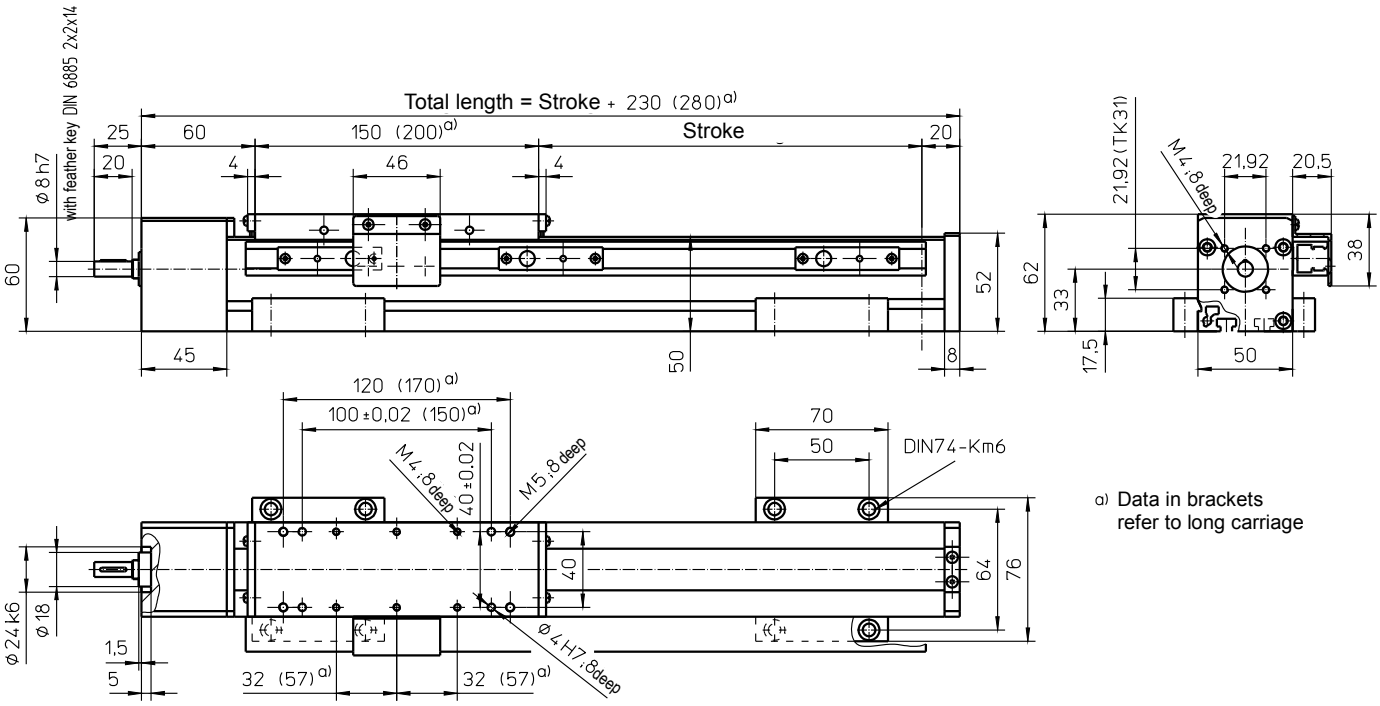

a) Data in brackets refer to long carriage

Weights	SRS
Basic length without stroke:	1.50 kg
100 mm stroke:	0.40 kg
Entire carriage 150 mm:	0.45 kg
Entire carriage 200 mm:	0.60 kg
Max. total length:	1090 mm

Technical Data	SRS
Max. speed:	0.5 m/s
Max. acceleration:	20 m/s²
Repeat accuracy:	± 0.03 mm (KGT)
Idle torque:	0.30 Nm

Forces and moments

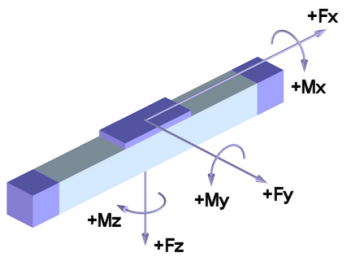

Drive element	KGT
Max. rotation speed:	3000 min^{-1}
Diameter:	12 mm
Pitch:	5 / 10 mm
Moment of inertia:	1.20 •10^{-5} kgm²/m

	SRS
Forces	Dynamic [N]
F_X	1000
F_Y	300
F_Z	600
$-F_Z$	400
Moments	Dynamic [Nm]
M_X	30
M_Y	50 (65)
M_Z	50 (65)

Data in brackets refer to long carriage (200)

For mechanical linear drives with roller guide,
the static load rating “C_{stat}” applies for static loads.

with toothed belt drive and rail guide (ZSS)

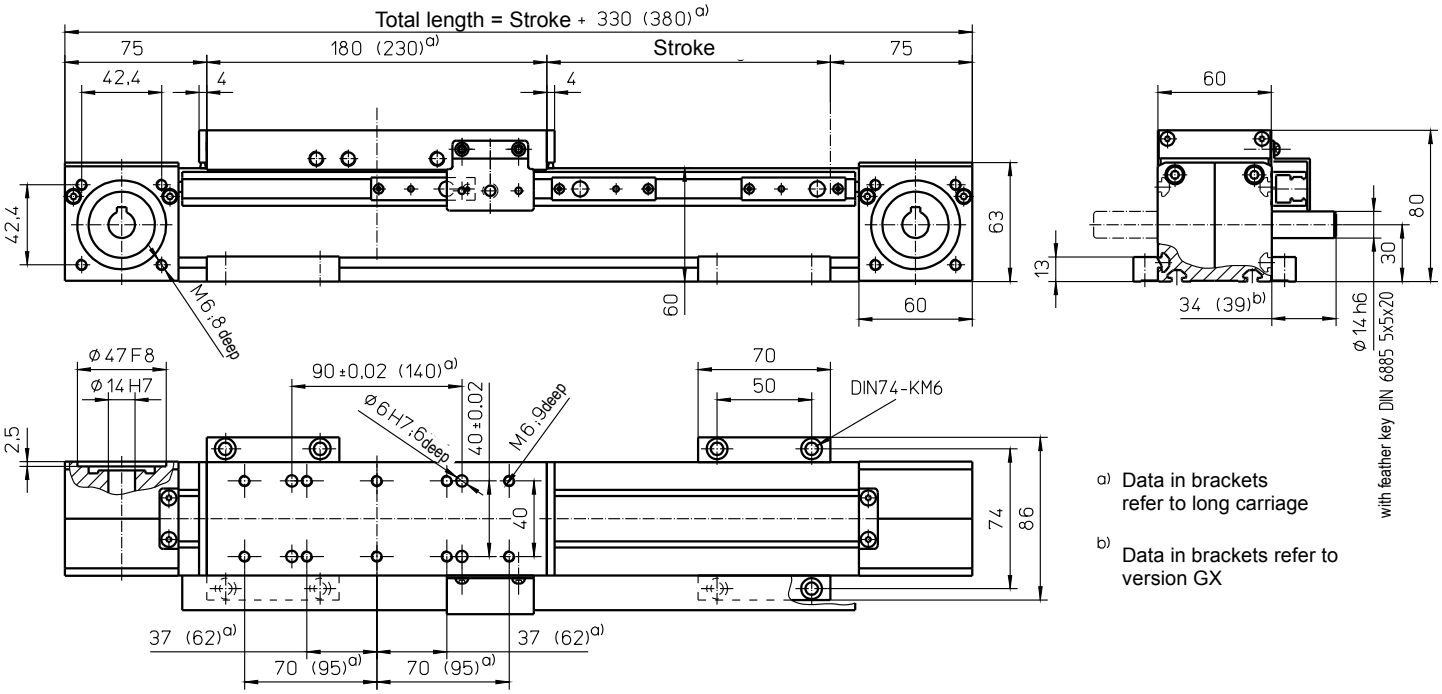

a) Data in brackets refer to long carriage

b) Data in brackets refer to version GX

Weights	ZSS
Basic length without stroke:	4.55 kg
100 mm stroke:	0.59 kg
Entire carriage 180 mm:	1.22 kg
Entire carriage 230 mm:	1.72 kg
Max. total length: (longer on request)	8000 mm

Technical Data	ZSS
Max. speed:	5.00 m/s
Max. acceleration:	30 m/s²
Repeat accuracy:	± 0.08 mm
Idle torque:	1.10 Nm
Moment of inertia:	2.00 •10^{-4} kgm²
Drive element:	Toothed belt **25 AT5-E**
Stroke per revolution:	160 mm

Forces and moments

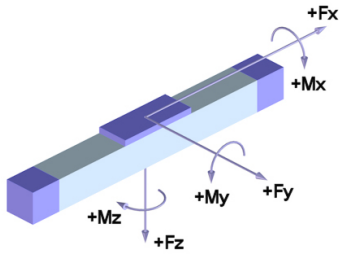

	ZSS
Forces	Dynamic [N]
F_X d)	850
F_Y	500
F_Z	1400
$-F_Z$	800
Moments	Dynamic [Nm]
M_X	50
M_Y	160 (200)
M_Z	100 (140)

d) Maximum value (see diagram "F_X-v-Diagram")

Data in brackets refer to long carriage (230)

F_X - v - Diagram

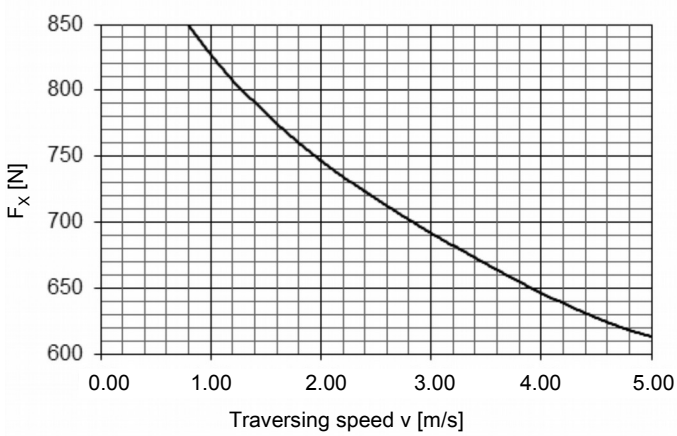

with ball screw (KGT) and sliding guide (SGV) or rail guide (SSS)

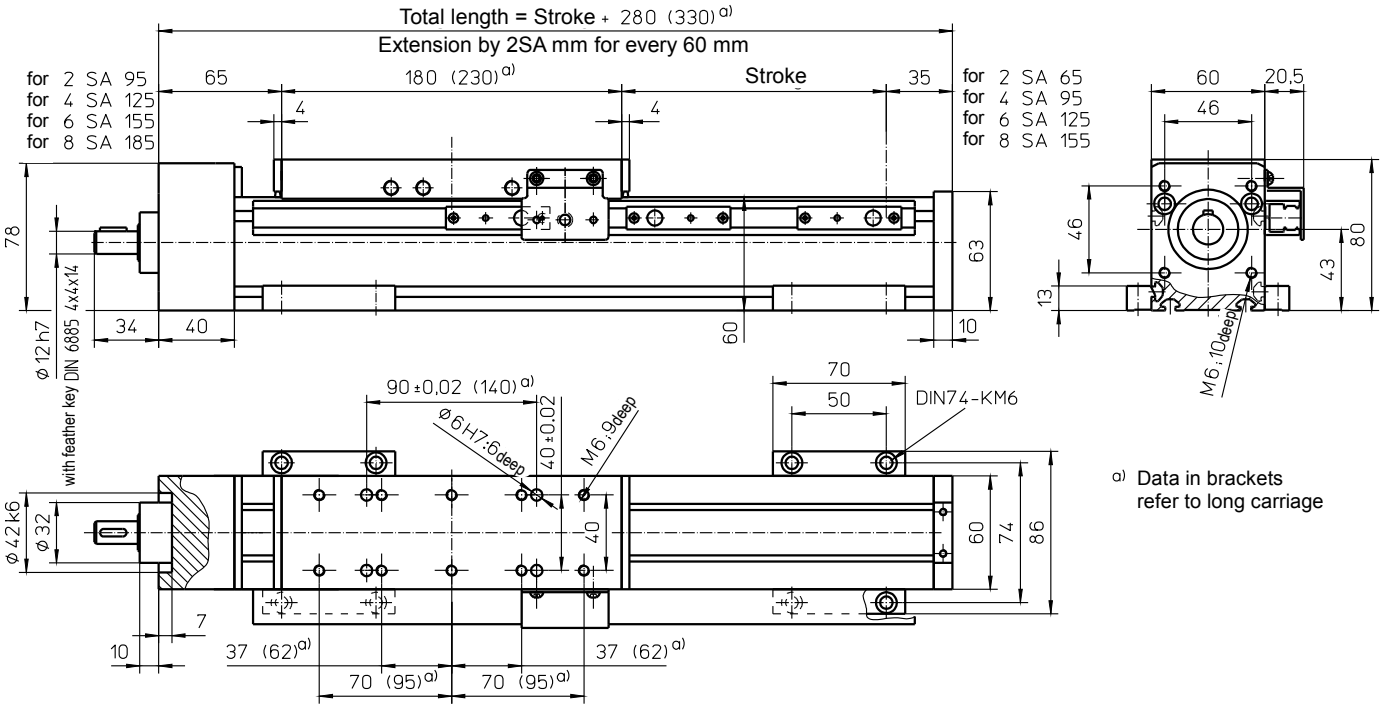

a) Data in brackets refer to long carriage

Weights	SGV	SSS
Basic length without stroke:	3.65 kg	4.30 kg
100 mm stroke:	0.65 kg	0.80 kg
Entire carriage 180 mm:	1.15 kg	1.50 kg
Entire carriage 230 mm:	-	1.80 kg

Max. total length: 5500 mm
(longer on request)

Technical Data	SGV	SSS
Max. speed:	2.50 m/s	
Max. acceleration:	20 m/s²	
Repeat accuracy:	± 0.03 mm (KGT)	
Idle torque:	0.70 Nm	

Forces and moments

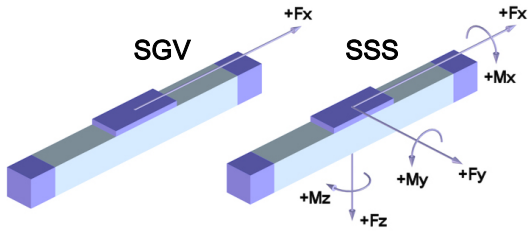

	SGV	SSS
Forces	Dynamic [N]	
F_x	4000	
F_Y	-	600
F_z	-	1800
$-F_z$	-	1200
Moments	Dynamic [Nm]	
M_X	-	60
M_Y	-	180 (220)
M_Z	-	120 (150)

" -" => Must have an external guide.
Data in brackets refer to long carriage (230)

Drive element	KGT
Max. rotation speed:	3000 min $^{-1}$
Diameter:	20 mm
Pitch:	5 / 10 / 20 / 50 mm
Moment of inertia:	8.50 •10^{-5} kgm²/m

Spindle support (SA)

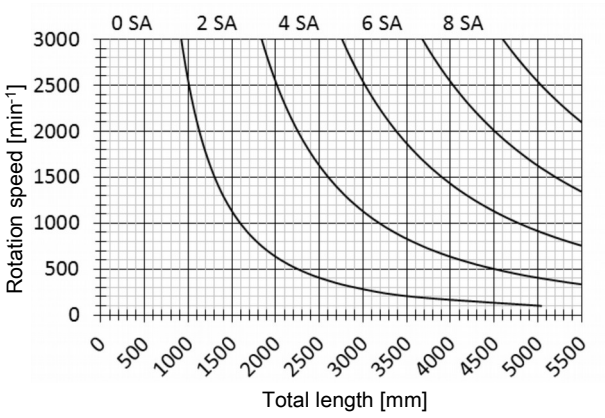

Special design: Spindle support with damping ring (extension of total length: 10 mm for every 2 SA)

Design with single nut („M“) und pitch „10“ is only available with carriage plate 230 mm.

Design with double nut („MM“) is only available with long carriage plate 230 mm and pitch „5“, „10“ oder „20“.

Release: 12.12.2016

with toothed belt drive and roller guide (ZRS) or rail guide (ZSS)

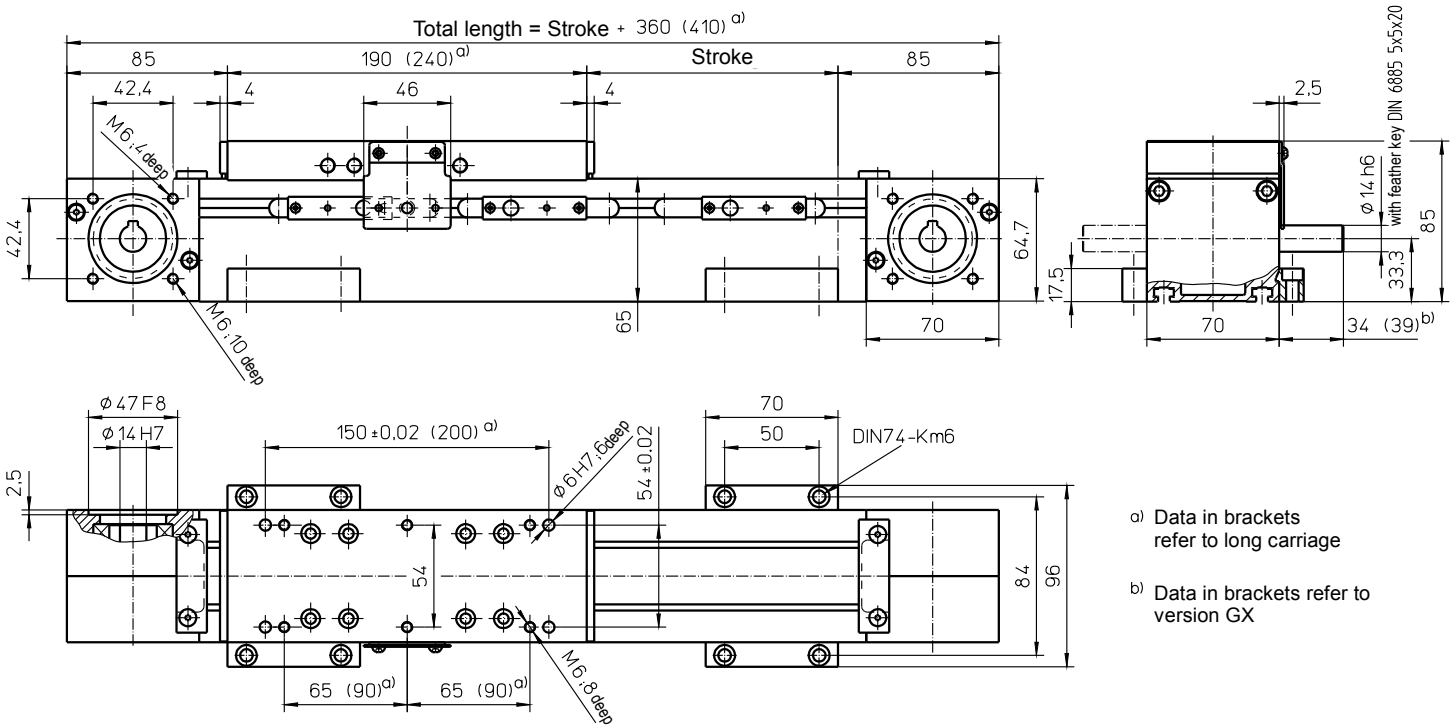

a) Data in brackets refer to long carriage

b) Data in brackets refer to version GX

Weights	ZRS	ZSS
Basic length without stroke:	3.10 kg	3.40 kg
100 mm stroke:	0.59 kg	0.38 kg
Entire carriage 190 mm:	1.30 kg	1.65 kg
Entire carriage 240 mm:	1.65 kg	2.10 kg
Max. total length: (longer on request)	8000 mm	7200 mm

Technical Data	ZRS	ZSS
Max. speed:	8.00 m/s	5.00 m/s
Max. acceleration:	30 m/s²	
Repeat accuracy:	± 0.08 mm	
Idle torque:	1.20 Nm	
Moment of inertia:	4.00 •10^{-4} kgm²	2.00 •10^{-4} kgm²
Drive element:	Toothed belt **32 AT5-E**	
Stroke per revolution:	175 mm	

Forces and moments

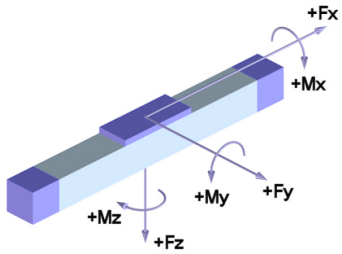

	ZRS	ZSS
Forces	Dynamic [N]	
F_x d)	1100	
F_Y	300	600
F_Z	1000	1800
$-F_Z$	400	1200
Moments	Dynamic [Nm]	
M_X	35	60
M_Y	120 (150)	180 (230)
M_Z	50 (60)	120 (150)

d) Maximum value (see diagram "F_X-v-Diagram")
Data in brackets refer to long carriage plate (240)

F_X - v - Diagram

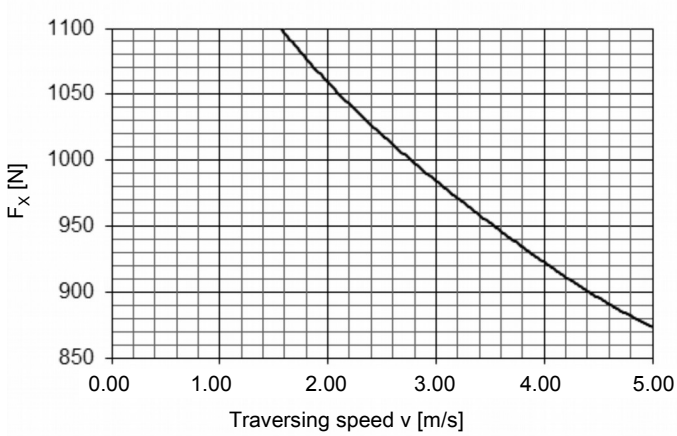

For mechanical linear drives with roller guide, the static load rating "C_{stat}" applies for static loads.

with toothed belt drive and roller guide (ARS) or rail guide (ASS)

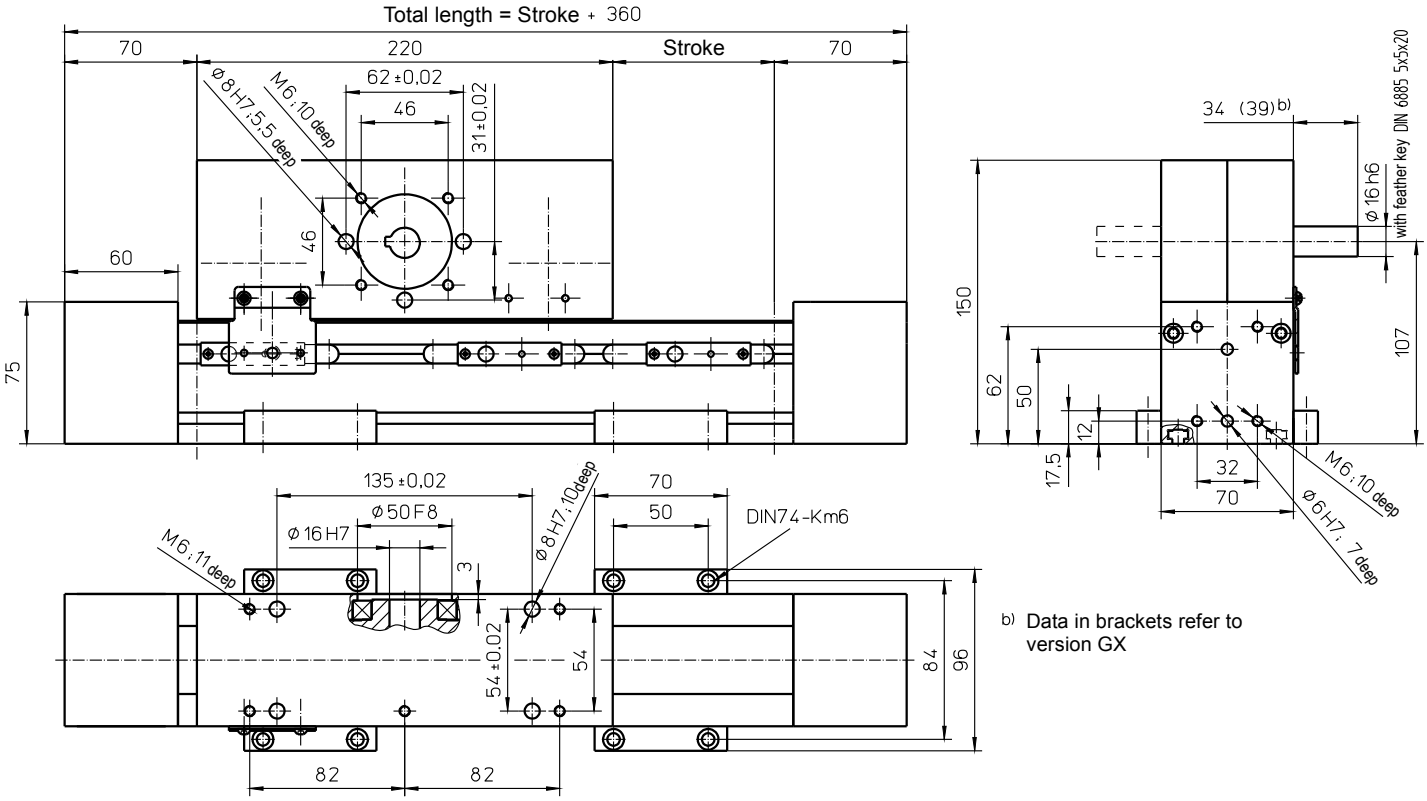

b) Data in brackets refer to version GX

Weights	ARS	ASS
Basic length without stroke:	7.50 kg	7.90 kg
100 mm stroke:	0.38 kg	0.60 kg
Carriage drive 220 mm:	5.00 kg	5.50 kg

Max. total length: 8000 mm
(longer on request)

Technical Data	ARS	ASS
Max. speed:	5.00 m/s	
Max. acceleration:	30 m/s²	
Repeat accuracy:	± 0.08 mm	
Idle torque:	1.00 Nm	
Moment of inertia:	6.10 •10^{-3} kgm²	
Drive element:	Toothed belt **32 AT5-E**	
Stroke per revolution:	220 mm	

Forces and moments

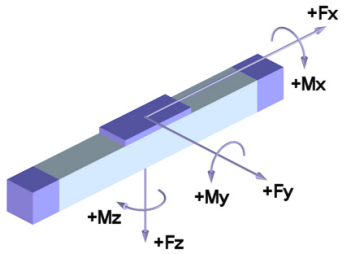

	ARS	ASS
Forces	Dynamic [N]	
F_x d)	900	
F_Y	300	600
F_Z	1000	1800
$-F_Z$	400	1200
Moments	Dynamic [Nm]	
M_X	35	60
M_Y	120	180
M_Z	50	120

d) Maximum value (see diagram "F_X-v-Diagram")

F_X - v - Diagram

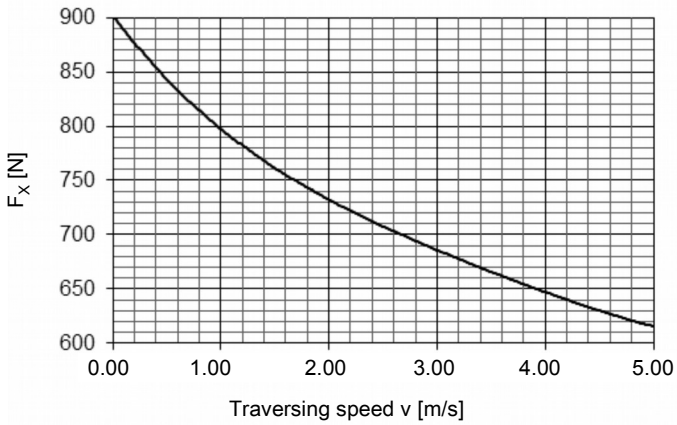

For mechanical linear drives with roller guide,
the static load rating "C_{stat}" applies for static loads.

with ball screw (KGT) and roller guide (SRS) or rail guide (SSS)

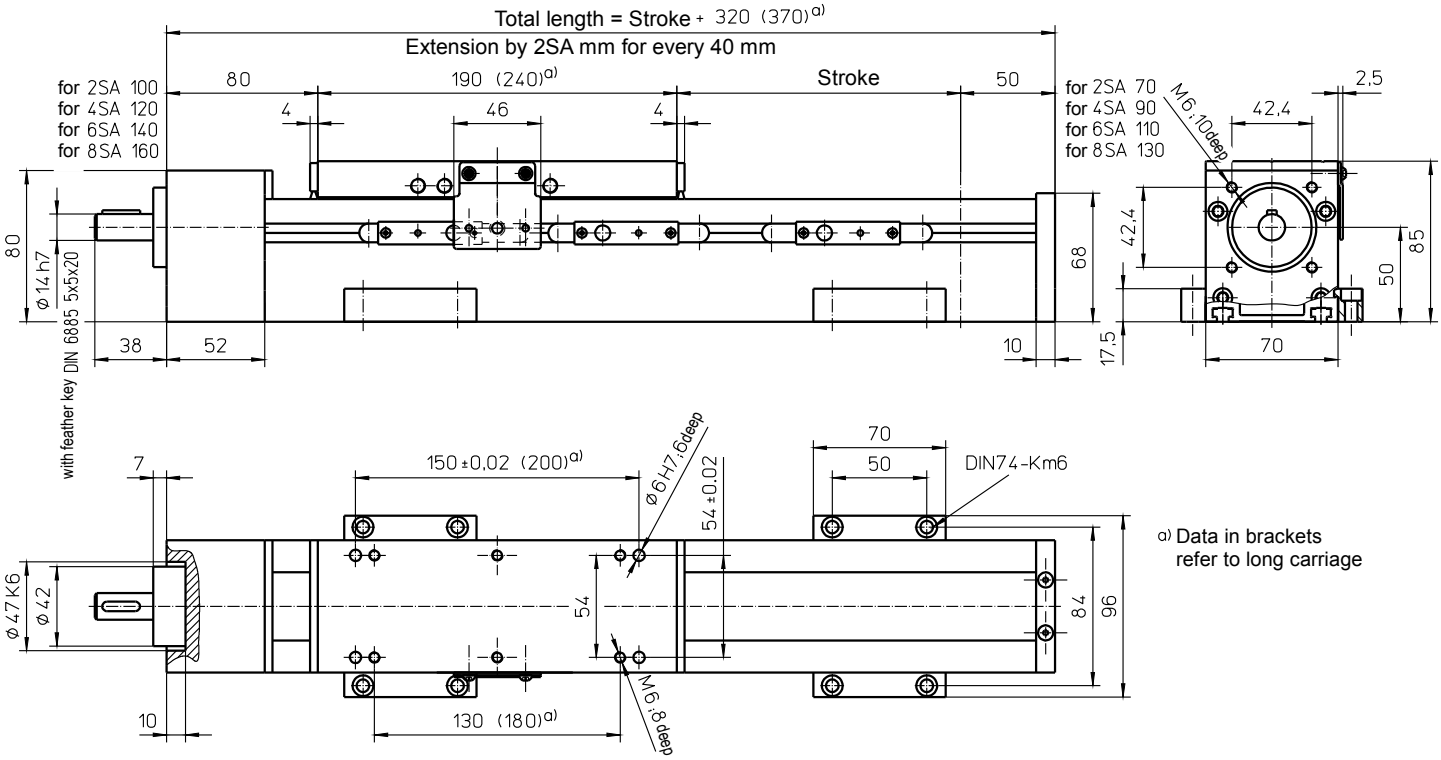

a) Data in brackets refer to long carriage

Weights	SRS	SSS
Basic length without stroke:	3.65 kg	3.50 kg
100 mm stroke:	0.45 kg	0.60 kg
Entire carriage 190 mm:	1.60 kg	1.25 kg
Entire carriage 240 mm:	2.02 kg	1.60 kg

Max. total length: 4000 mm
(longer on request)

Technical Data	SRS	SSS
Max. speed:	2.00 m/s	
Max. acceleration:	20 m/s²	
Repeat accuracy:	± 0.03 mm (KGT)	
Idle torque:	0.35 Nm	0.40 Nm

Forces and moments

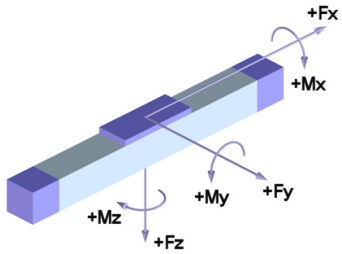

	SRS	SSS
Forces	Dynamic [N]	
F_X	2000	
F_Y	300	600
F_Z	1000	1800
$-F_Z$	400	1200
Moments	Dynamic [Nm]	
M_X	35	60
M_Y	120 (150)	180 (220)
M_Z	60 (70)	120 (150)

Data in brackets refer to long carriage plate (240)

Drive element	KGT
Max. rotation speed:	3000 min^{-1}
Diameter:	16 mm
Pitch:	5 / 10 / 20 / 40 mm
Moment of inertia:	3.25 •10^{-5} kgm²/m

Spindle support (SA)

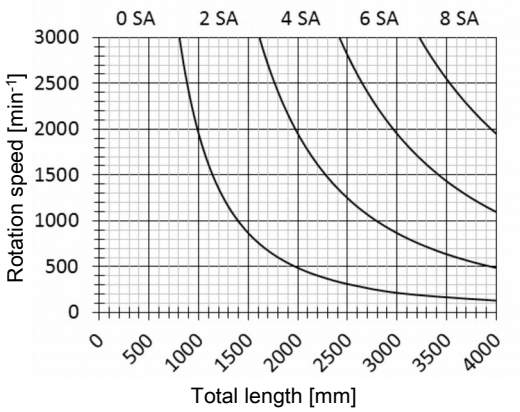

For version "SRS" only 6 SA possible.

For mechanical linear drives with roller guide, the static load rating "C_{stat}" applies for static loads.

Special design: Spindle support with damping ring (extension of total length: 10 mm for every 2 SA)

with toothed belt drive and roller guide (ZRS) or rail guide (ZSS)

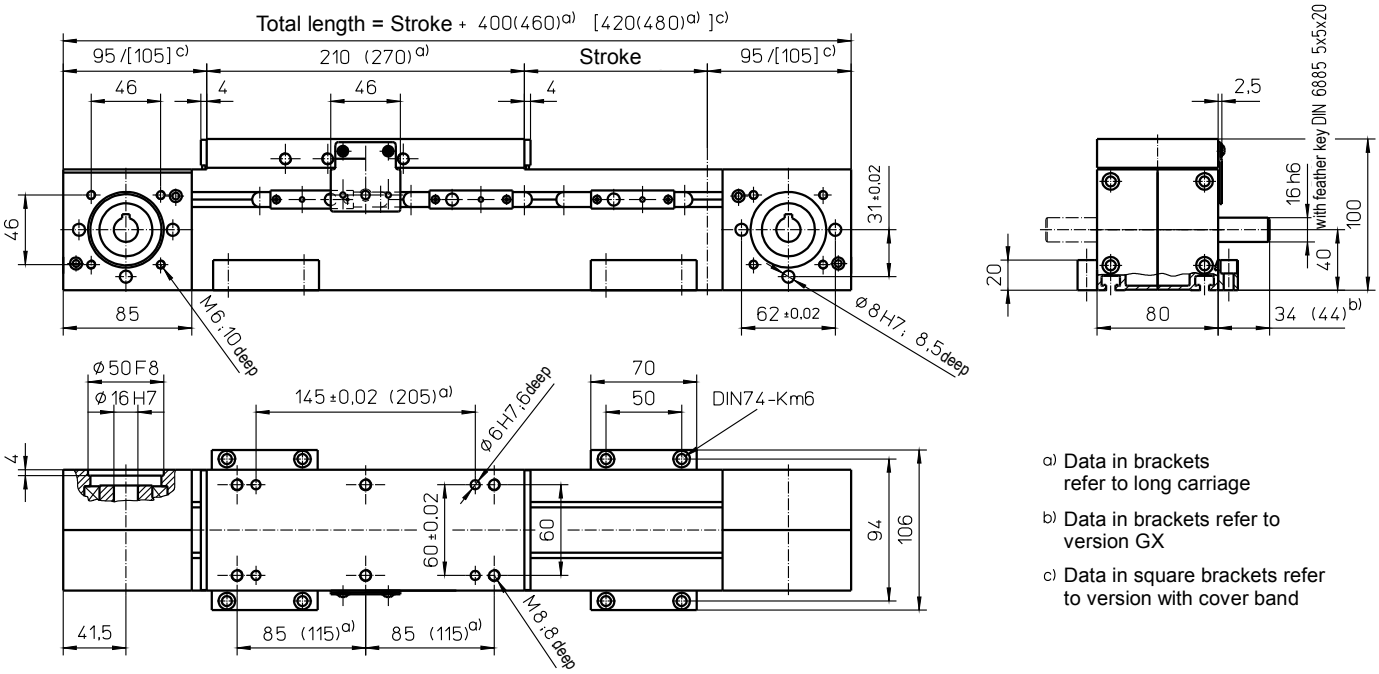

a) Data in brackets refer to long carriage

b) Data in brackets refer to version GX

c) Data in square brackets refer to version with cover band

Weights	ZRS	ZSS
Basic length without stroke:	5.50 kg	6.10 kg
100 mm stroke:	0.60 kg	0.85 kg
Entire carriage 210 mm:	2.10 kg	1.80 kg
Entire carriage 270 mm:	2.70 kg	2.30 kg

Max. total length: 8000 mm
(longer on request)

Technical Data	ZRS	ZSS
Max. speed:	8.00 m/s	5.00 m/s
Max. acceleration:	40 m/s²	
Repeat accuracy:	± 0.08 mm	
Idle torque:	1.50 Nm	
Moment of inertia:	$3.30 \cdot 10^{-3}$ kgm²	$3.00 \cdot 10^{-3}$ kgm²
Drive element:	Toothed belt **32 AT5-E**	
Stroke per revolution:	220 mm	

Forces and moments

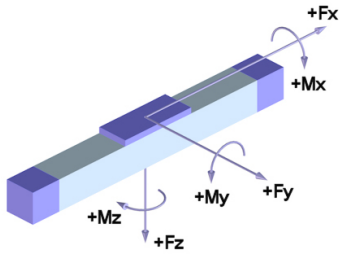

	ZRS	ZSS
Forces	Dynamic [N]	
F_X d)	1350	
F_Y	500	800
F_Z	1500	3000
$-F_Z$	800	2000
Moments	Dynamic [Nm]	
M_X	50	100
M_Y	180 (220)	250 (300)
M_Z	100 (130)	250 (300)

d) Maximum value (see diagram "F_X-v-Diagram")
Data in brackets refer to long carriage plate (270)

F_X - v - Diagram

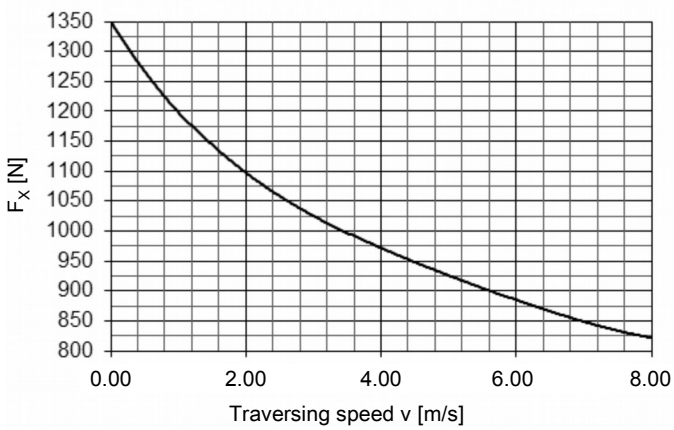

For mechanical linear drives with roller guide,
the static load rating "C_{stat}" applies for static loads.

Release: 05.11.2010

with toothed belt drive and roller guide (ARS) or rail guide (ASS)

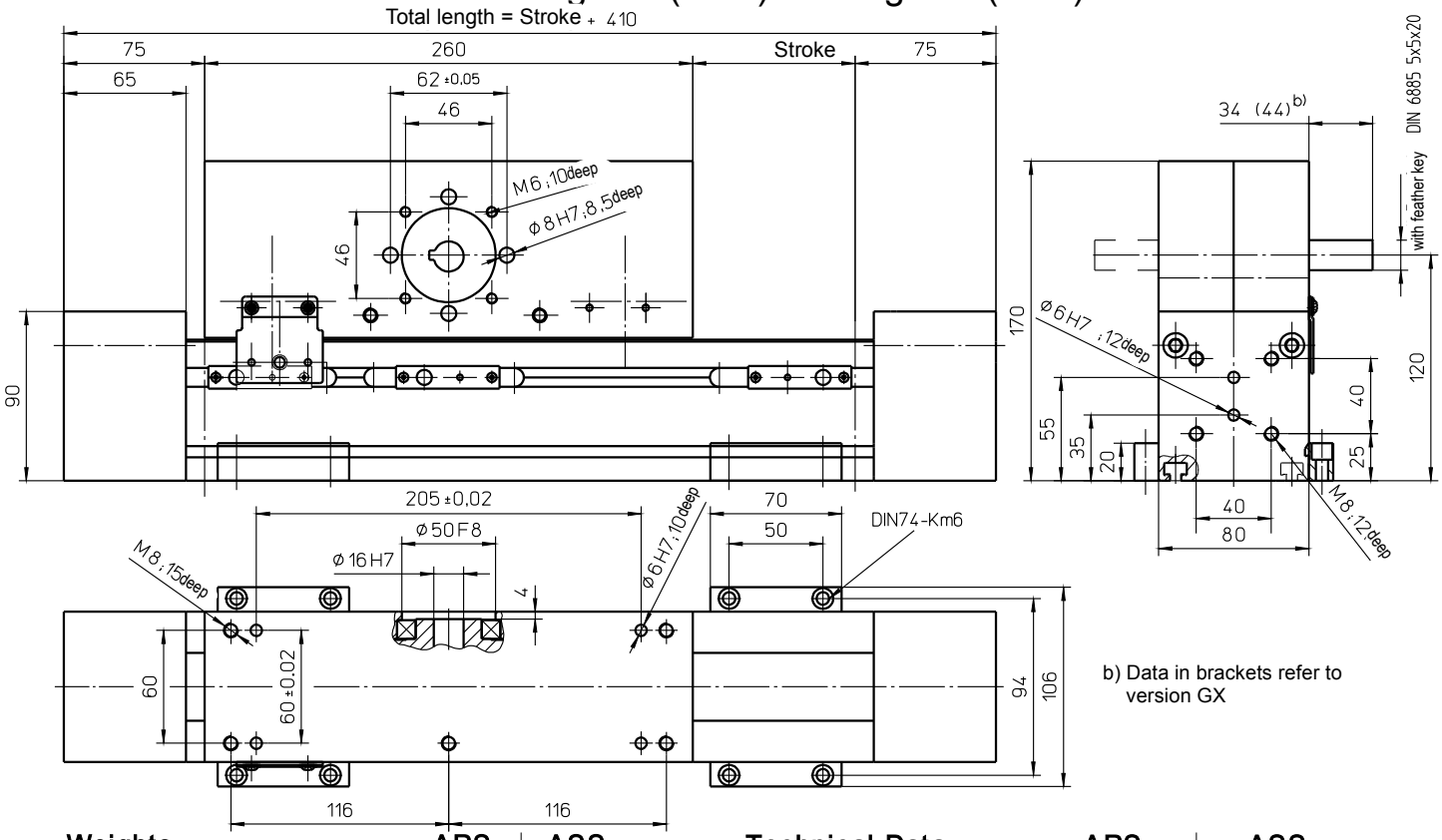

b) Data in brackets refer to version GX

Weights	ARS	ASS
Basic length without stroke:	10.50 kg	11.50 kg
100 mm stroke:	0.60 kg	0.85 kg
Carriage drive 260 mm:	7.50 kg	7.00 kg
Max. total length: (longer on request)	8000 mm	

Technical Data	ARS	ASS
Max. traverse speed:	8.00 m/s	5.00 m/s
Max. acceleration:	40 m/s²	
Repeat accuracy:	± 0.08 mm	
Idle torque:	1.5 Nm	
Moment of inertia:	$9.20 \cdot 10^{-3}$ kgm²	$8.60 \cdot 10^{-3}$ kgm²
Drive element:	Toothed belt **32 AT10**	
Stroke per revolution:	220 mm	

Forces and moments

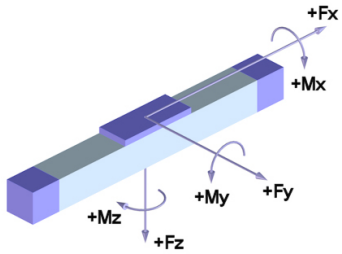

	ARS	ASS
Forces	Dynamic [N]	
F_x d)	1000	
F_Y	500	800
F_Z	1500	3000
$-F_Z$	800	2000
Moments	Dynamic [Nm]	
M_X	50	100
M_Y	180	250
M_Z	100	250

d) Maximum value (see diagram "F_X-v-Diagram")

F_X - v - Diagram

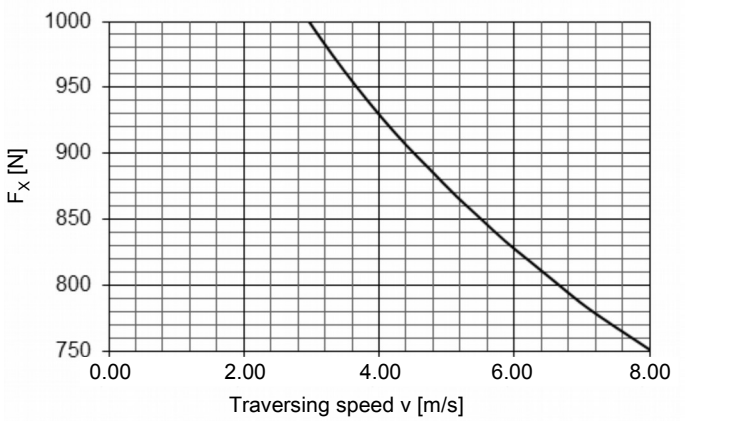

For mechanical linear drives with roller guide, the static load rating "C_{stat}" applies for static loads.

with ball screw (KGT) and roller guide (SRS) or rail guide (SSS)

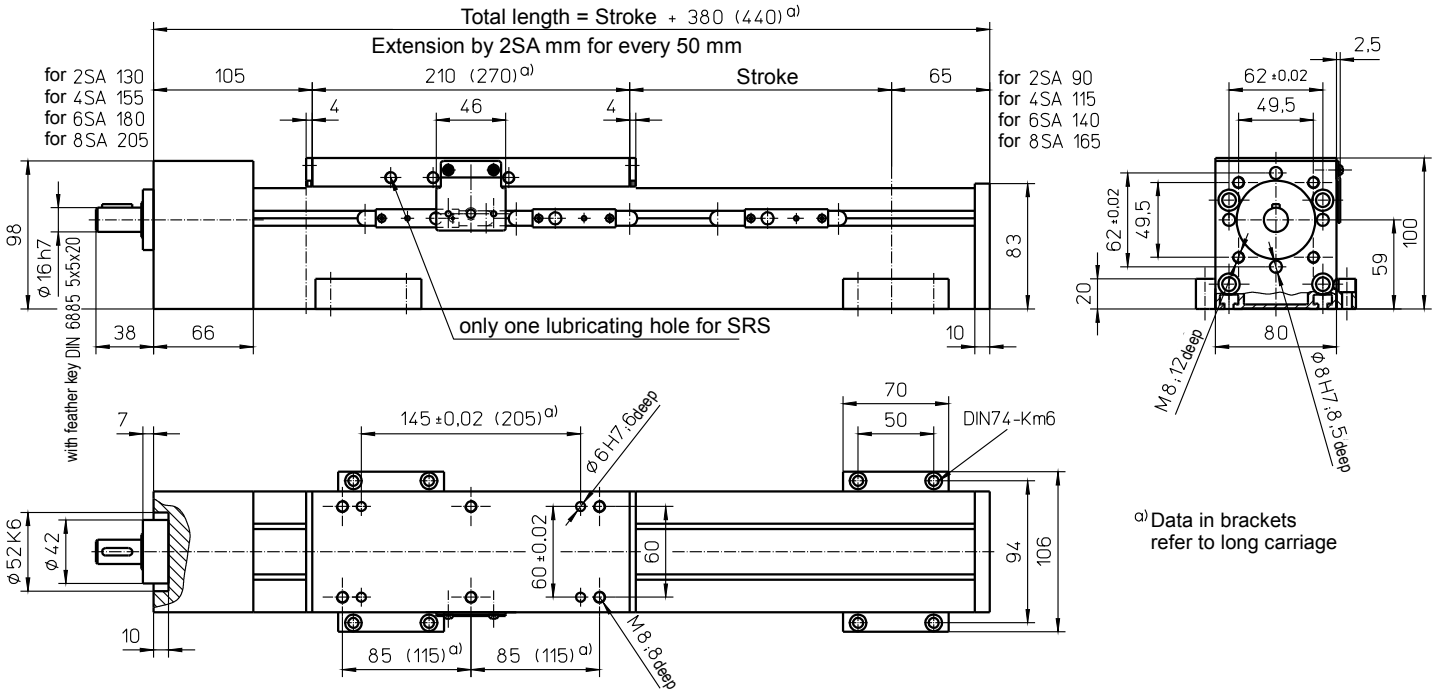

a) Data in brackets refer to long carriage

Weights	SRS	SSS
Basic length without stroke:	5.40 kg	6.20 kg
100 mm stroke:	0.70 kg	1.10 kg
Entire carriage 210 mm:	2.20 kg	1.90 kg
Entire carriage 270 mm:	2.80 kg	2.40 kg

Technical Data	SRS	SSS
Max. speed:	2.50 m/s	
Max. acceleration:	20 m/s²	
Repeat accuracy:	± 0.03 mm (KGT)	
Idle torque:	0.60 Nm	0.80 Nm

Max. total length: 5600 mm
(longer on request)

Forces and moments

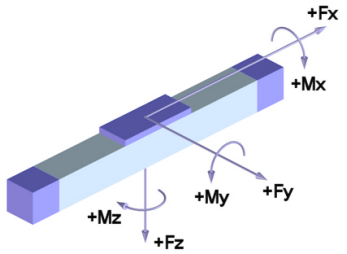

	SRS	SSS
Forces	Dynamic [N]	
F_X	4000	
F_Y	500	800
F_Z	1500	3000
$-F_Z$	800	2000
Moments	Dynamic [Nm]	
M_X	50	100
M_Y	180 (270)	250 (300)
M_Z	100 (130)	250 (300)

Data in brackets refer to long carriage plate (270)

Drive element	KGT
Max. rotation speed:	3000 min^{-1}
Diameter:	20 mm
Pitch:	5 / 10 / 20 / 50 mm
Moment of inertia:	8.50 •10^{-5} kgm²/m

Spindle support (SA)

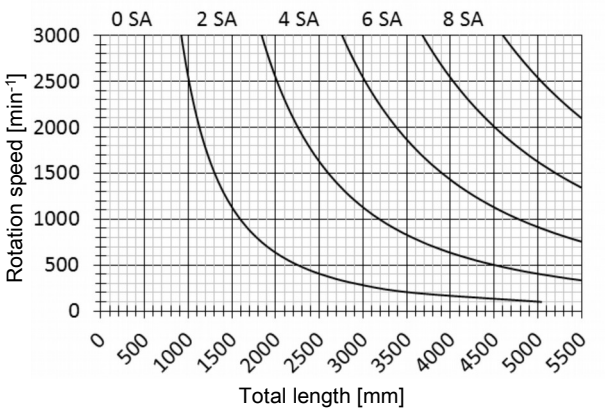

For mechanical linear drives with roller guide, the static load rating "C_{stat}" applies for static loads.

Special design: Spindle support with damping ring (extension of total length: 10 mm for every 2 SA)

Design with double nut („MM") is only available with long carriage plate 270 mm and pitch „5", „10" oder „20".

Release: 12.12.2016

with ball screw (KGT) and sliding guide (SGV)

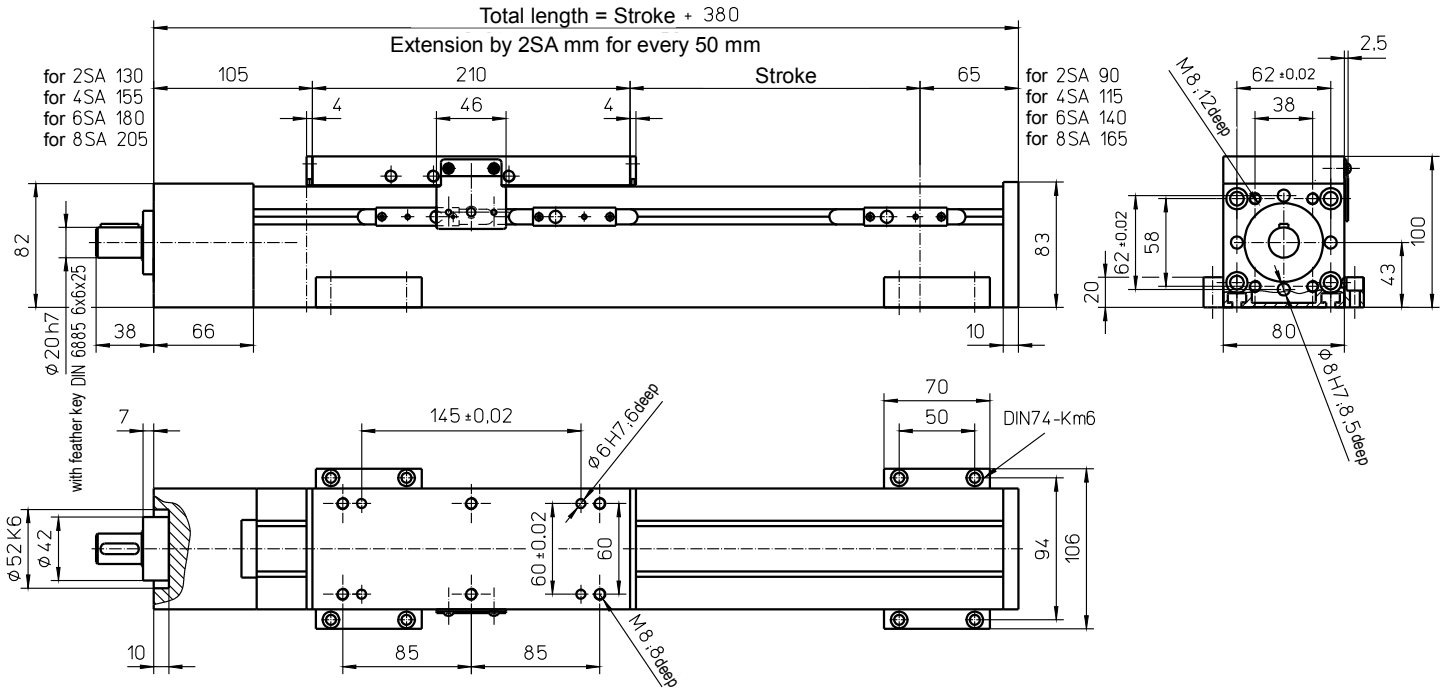

Weights	SGV
Basic length without stroke:	12.5 kg
100 mm stroke:	1.40 kg
Entire carriage 210 mm:	5.80 kg
Max. total length:	5600 mm
(longer on request)	

Technical Data	SGV
Max. speed:	2.50 m/s
Max. acceleration:	20 m/s²
Repeat accuracy:	± 0.03 mm (KGT)
Idle torque:	1.00 Nm

Forces and moments

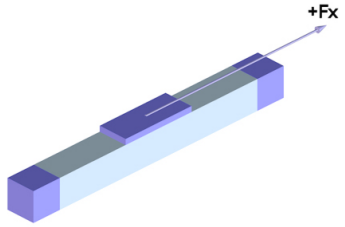

	SGV
Forces	Dynamic [N]
F_X	6000
F_Y	-
F_Z	-
$-F_Z$	-
Moments	Dynamic [Nm]
M_X	-
M_Y	-
M_Z	-

“ -” => Must have an external guide.

Drive element	KGT
Max. rotation speed:	3000 min^{-1}
Diameter:	25 mm
Pitch:	5 / 10 / 25 / 50 mm
Moment of inertia:	2.25 •10^{-4} kgm²/m

Spindle support (SA)

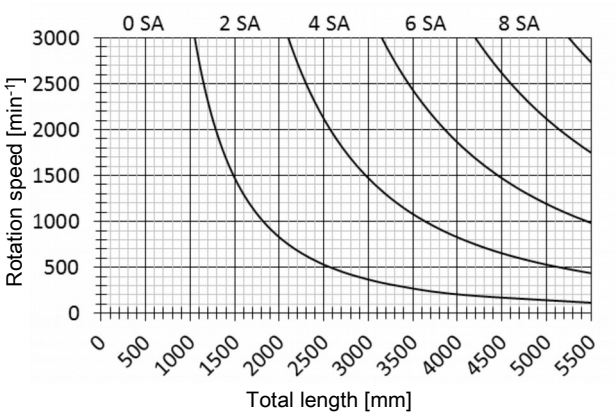

Special design: Spindle support with damping ring (extension of total length: 10 mm for every 2 SA)

with toothed belt drive and roller guide (ZRS) or rail guide (ZSS)

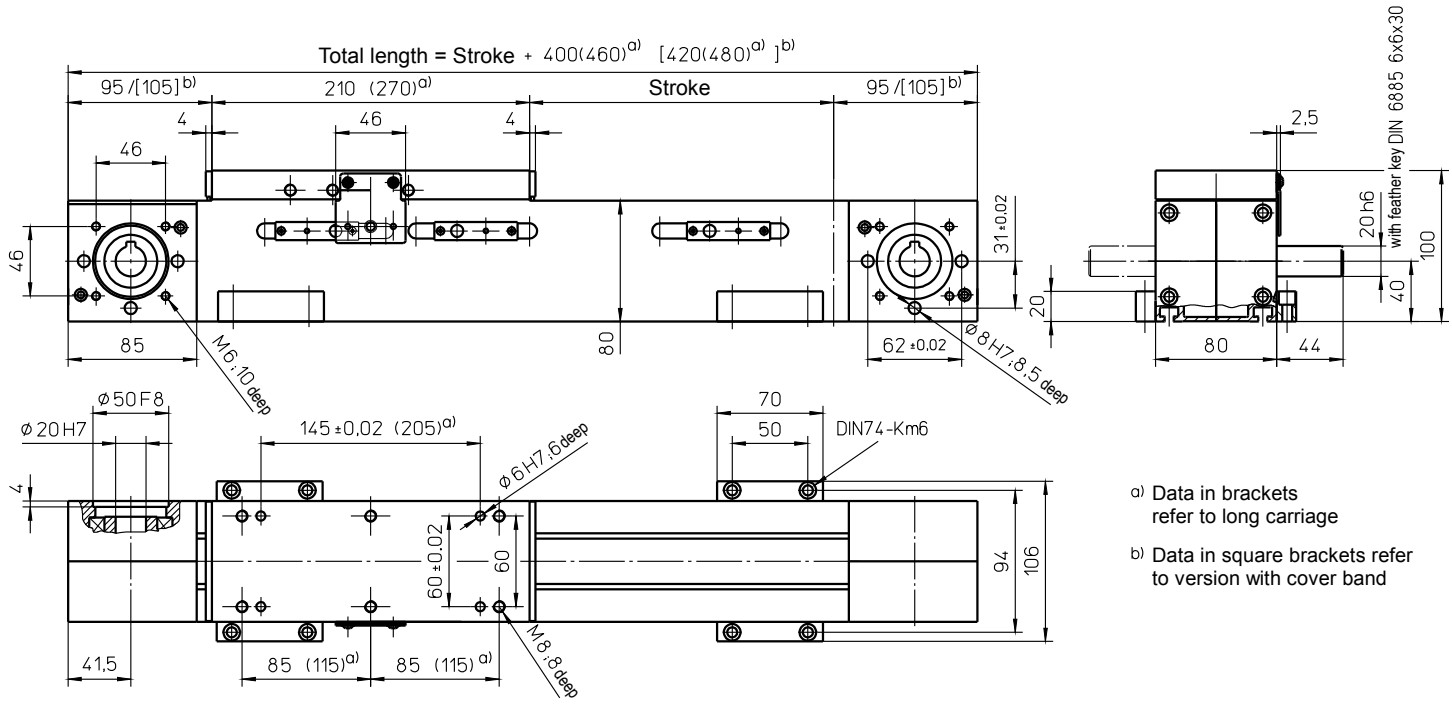

a) Data in brackets refer to long carriage

b) Data in square brackets refer to version with cover band

Weights	ZRS	ZSS
Basic length without stroke:	5.03 kg	7.80 kg
100 mm stroke:	0.65 kg	0.98 kg
Entire carriage 210 mm:	3.00 kg	2.75 kg
Entire carriage 270 mm:	3.70 kg	3.25 kg

Max. total length: 8000 mm
(longer on request)

Technical Data	ZRS	ZSS
Max. speed:	8.00 m/s	5.00 m/s
Max. acceleration:	40 m/s²	
Repeat accuracy:	± 0.08 mm	
Idle torque:	1.80 Nm	
Moment of inertia:	$4.20 \cdot 10^{-3}$ kgm²	$4.00 \cdot 10^{-3}$ kgm²
Drive element:	Toothed belt **32 AT10**	
Stroke per revolution:	210 mm	

Forces and moments

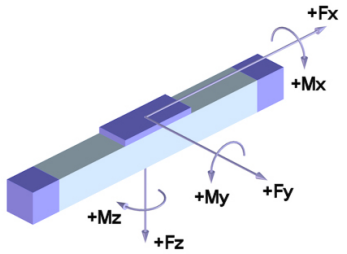

	ZRS	ZSS
Forces	Dynamic [N]	
F_x d)	2200	
F_Y	1000	1600
F_Z	2500	4000
$-F_Z$	1500	3000
Moments	Dynamic [Nm]	
M_X	100	300
M_Y	300 (400)	500 (640)
M_Z	180 (250)	500 (640)

d) Maximum value (see diagram "F_X-v-Diagram")
Data in brackets refers to long carriage plate (270)

F_X - v - Diagram

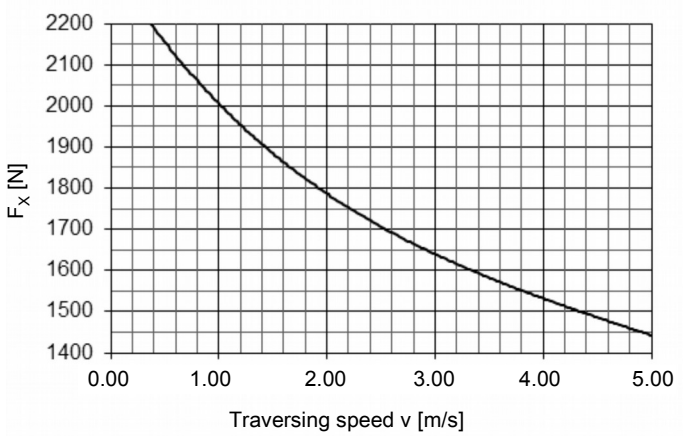

Release: 28.01.2011

with toothed belt drive and roller guide (ZRS) or rail guide (ZSS)

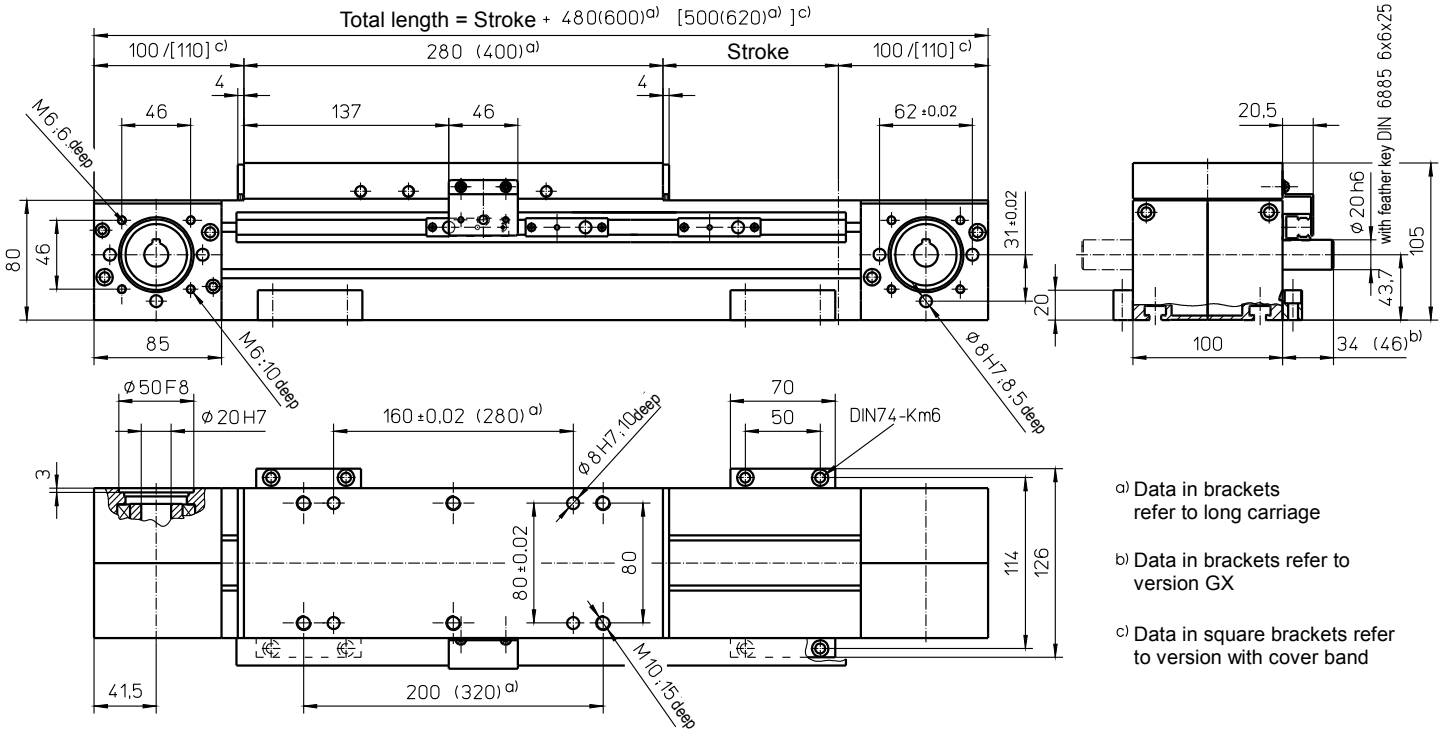

a) Data in brackets refer to long carriage

b) Data in brackets refer to version GX

c) Data in square brackets refer to version with cover band

Weights	ZRS	ZSS
Basic length without stroke:	9.50 kg	9.10 kg
100 mm stroke:	1.10 kg	1.45 kg
Entire carriage 280 mm:	4.10 kg	3.80 kg
Entire carriage 400 mm:	5.85 kg	5.43 kg

Max. total length: 7900 mm
(longer on request)

Technical Data	ZRS	ZSS
Max. speed:	8.00 m/s	5.00 m/s
Max. acceleration:	40 m/s²	
Repeat accuracy:	± 0.08 mm	
Idle torque:	2.50 Nm	
Moment of inertia:	$1.30 \cdot 10^{-2}$ kgm²	$1.26 \cdot 10^{-2}$ kgm²
Drive element:	Toothed belt **40 AT10**	
Stroke per revolution:	200 mm	

Forces and moments

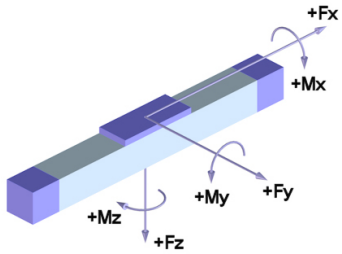

	ZRS	ZSS
Forces	Dynamic [N]	
F_x d)	2800	
F_Y	1000	
F_Z	2500	3000
$-F_Z$	1200	2000
Moments	Dynamic [Nm]	
M_X	200	200
M_Y	250 (350)	300 (420)
M_Z	200 (280)	300 (420)

d) Maximum value (see diagram "F_X-v-Diagram")
Data in brackets refer to long carriage plate (400)

F_X - v - Diagram

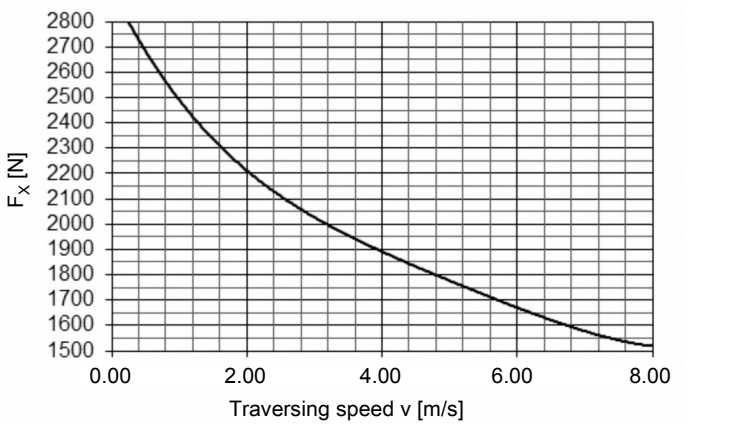

For mechanical linear drives with roller guide, the static load rating "C_{stat}" applies for static loads.

with toothed belt drive and double linear guide (ZSS)

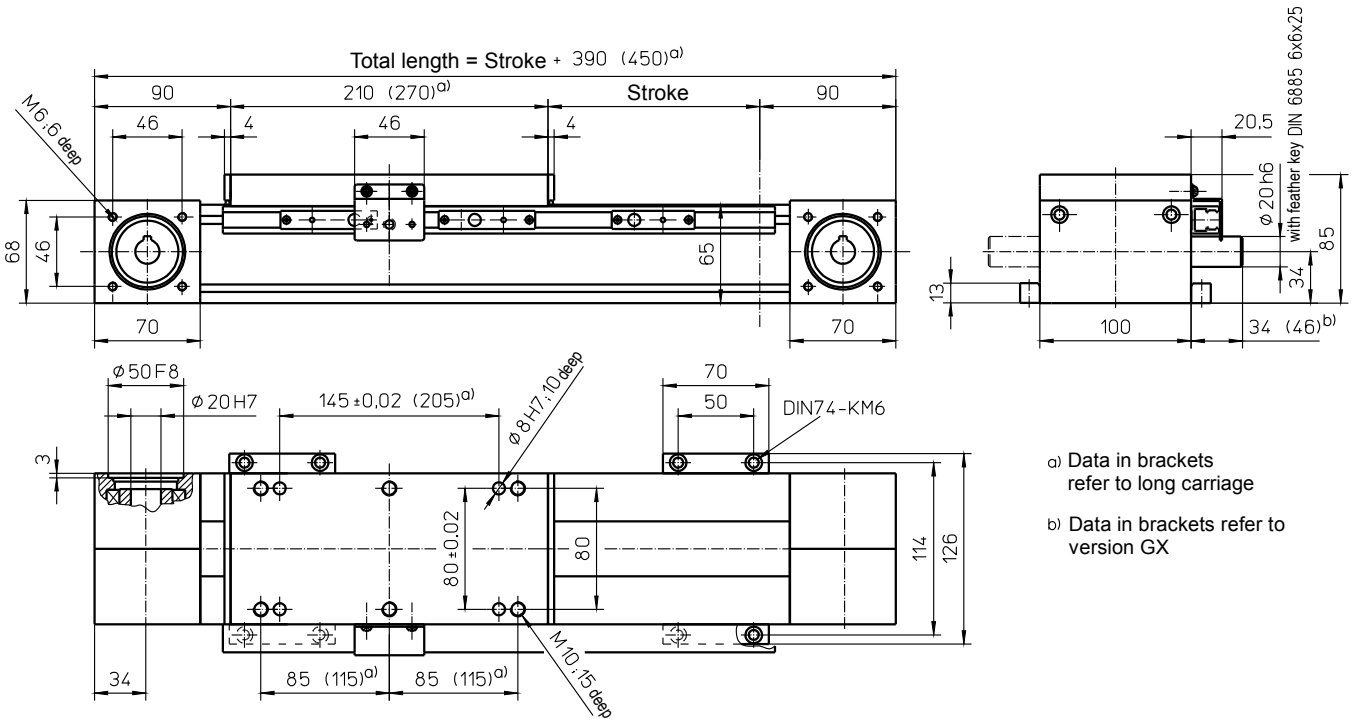

a) Data in brackets refer to long carriage

b) Data in brackets refer to version GX

Weights	ZSS
Basic length without stroke:	6.80 kg
100 mm stroke:	0.75 kg
Entire carriage 210 mm:	3.50 kg
Entire carriage 270 mm:	4.10 kg
Max. total length: (longer on request)	8100 mm

Technical Data	ZSS
Max. speed:	5.00 m/s
Max. acceleration:	60 m/s²
Repeat accuracy:	± 0.08 mm
Idle torque:	5.00 Nm
Moment of inertia:	2.80 •10^{-3} kgm²
Drive element:	Toothed belt **40 AT10-E**
Stroke per revolution:	160 mm

Forces and moments

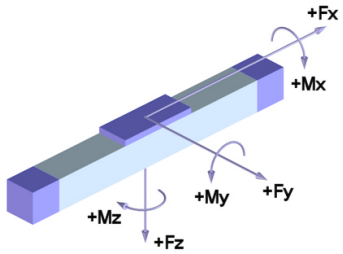

	ZSS
Forces	Dynamic [N]
F_x d)	1500
F_Y	1800
F_Z	4000
$-F_Z$	3000
Moments	Dynamic [Nm]
M_X	350
M_Y	750 (1000)
M_Z	750 (1000)

d) Maximum value (see diagram "F_X-v-Diagram")
Data in brackets refer to long carriage plate (270)

F_X - v - Diagram

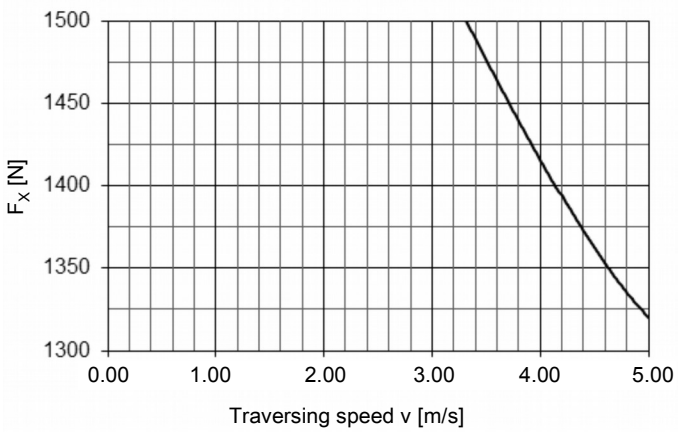

Release: 21.12.2011

with toothed belt drive and double rail guide (ASS)

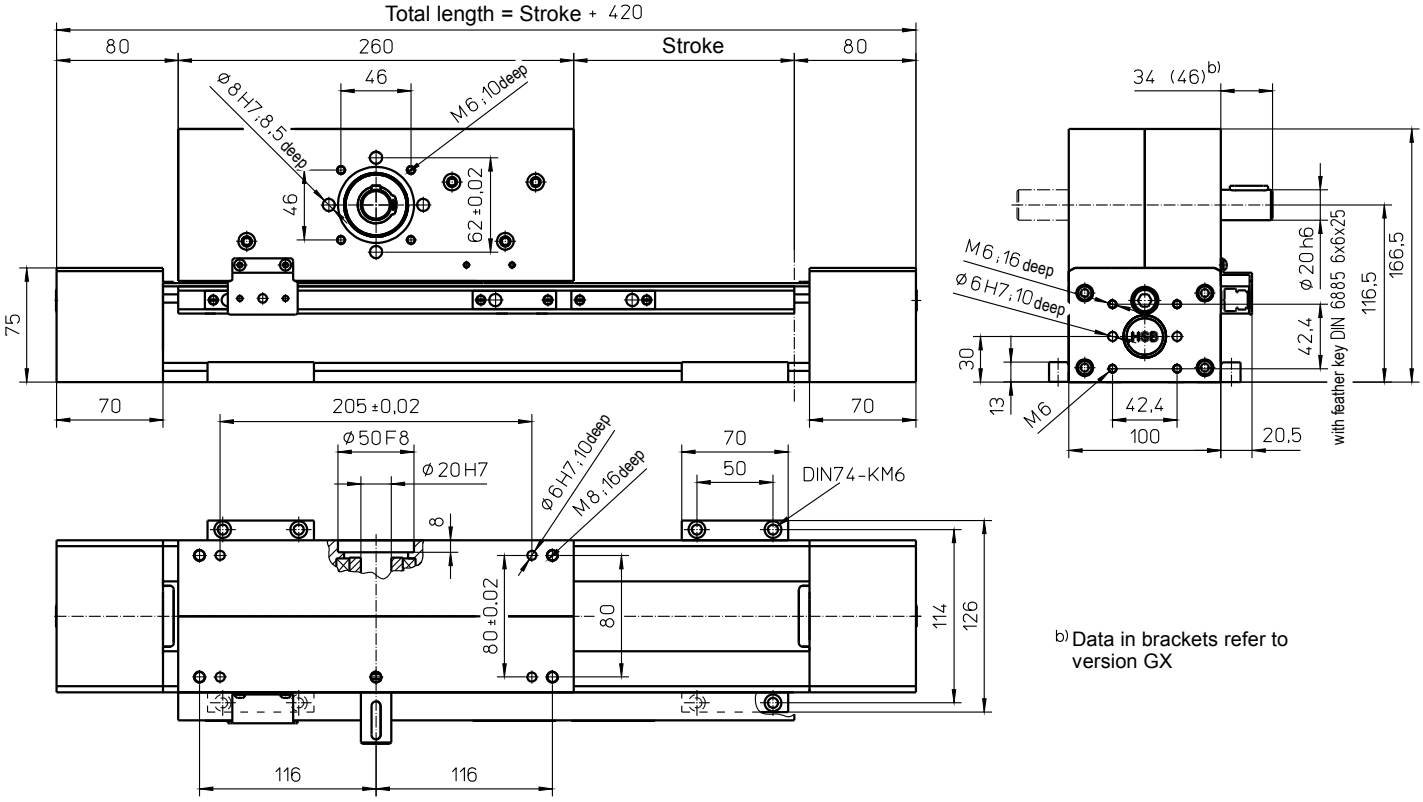

b) Data in brackets refer to version GX

Weights	ASS
Basic length without stroke:	14.00 kg
100 mm stroke:	0.90 kg
Carriage drive 260 mm:	8.60 kg
Max. total length:	8100 mm
(longer on request)	

Technical Data	ASS
Max. speed:	5.00 m/s
Max. acceleration:	60 m/s²
Repeat accuracy:	± 0.08 mm
Idle torque:	2.50 Nm
Moment of inertia:	1.20 •10^{-2} kgm²
Drive element:	Toothed belt **40 AT10-E**
Stroke per revolution:	240 mm

Forces and moments

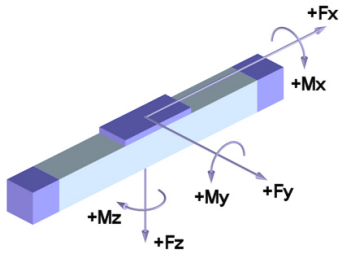

	ASS
Forces	Dynamic [N]
F_x d)	2200
F_Y	1800
F_Z	4000
$-F_Z$	3000
Moments	Dynamic [Nm]
M_X	350
M_Y	950
M_Z	950

d) Maximum value (see diagram "F_X-v-Diagram")

F_X - v - Diagram

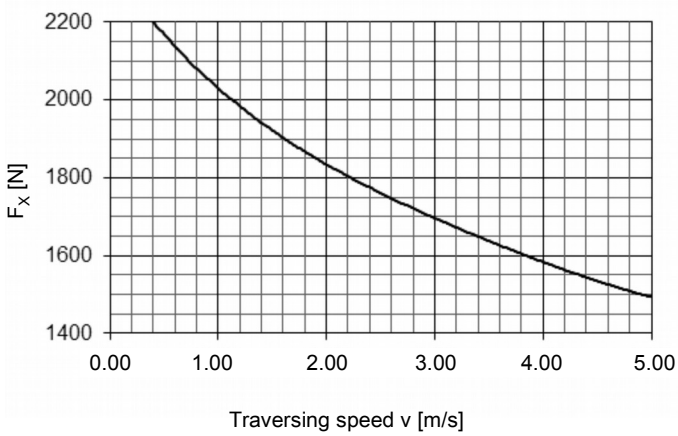

with ball screw (KGT) and double linear guide (SSS)

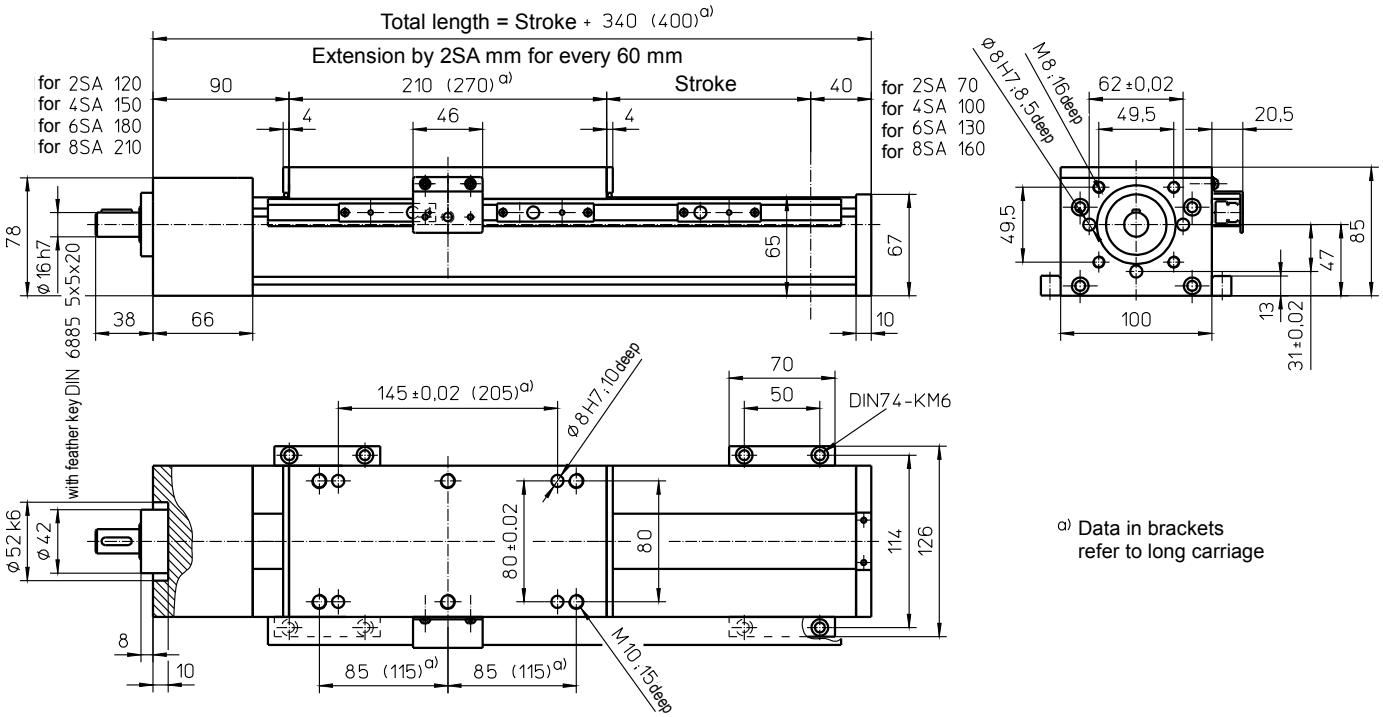

a) Data in brackets refer to long carriage

Weights	SSS
Basic length without stroke:	6.20 kg
100 mm stroke:	0.75 kg
Entire carriage 210 mm:	3.40 kg
Entire carriage 270 mm:	4.00 kg
Max. total length: (longer on request)	5600 mm

Technical Data	SSS
Max. speed:	2.50 m/s
Max. acceleration:	20 m/s²
Repeat accuracy:	± 0.03 mm (KGT)
Idle torque:	1.30 Nm

Forces and moments

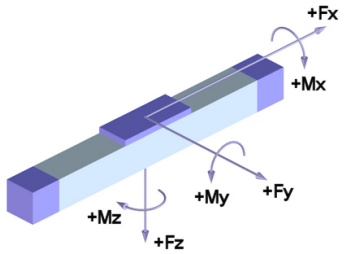

	SSS
Forces	Dynamic [N]
F_X	4000
F_Y	1800
F_Z	4000
$-F_Z$	3000
Moments	Dynamic [Nm]
M_X	350
M_Y	750 (1000)
M_Z	750 (1000)

Data in brackets refer to long carriage plate (270)

Drive element	KGT
Max. rotation speed:	3000 min^{-1}
Diameter:	20 mm
Pitch:	5 / 10 / 20 / 50 mm
Moment of inertia:	8.50 •10^{-5} kgm²/m

Spindle support (SA)

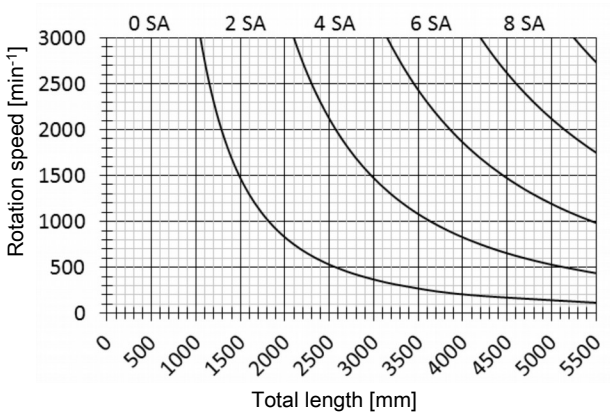

Special design: Spindle support with damping ring (extension of total length: 10 mm for every 2 SA)

Release: 12.12.2016

with toothed belt drive and roller guide (ZRS) or rail guide (ZSS)

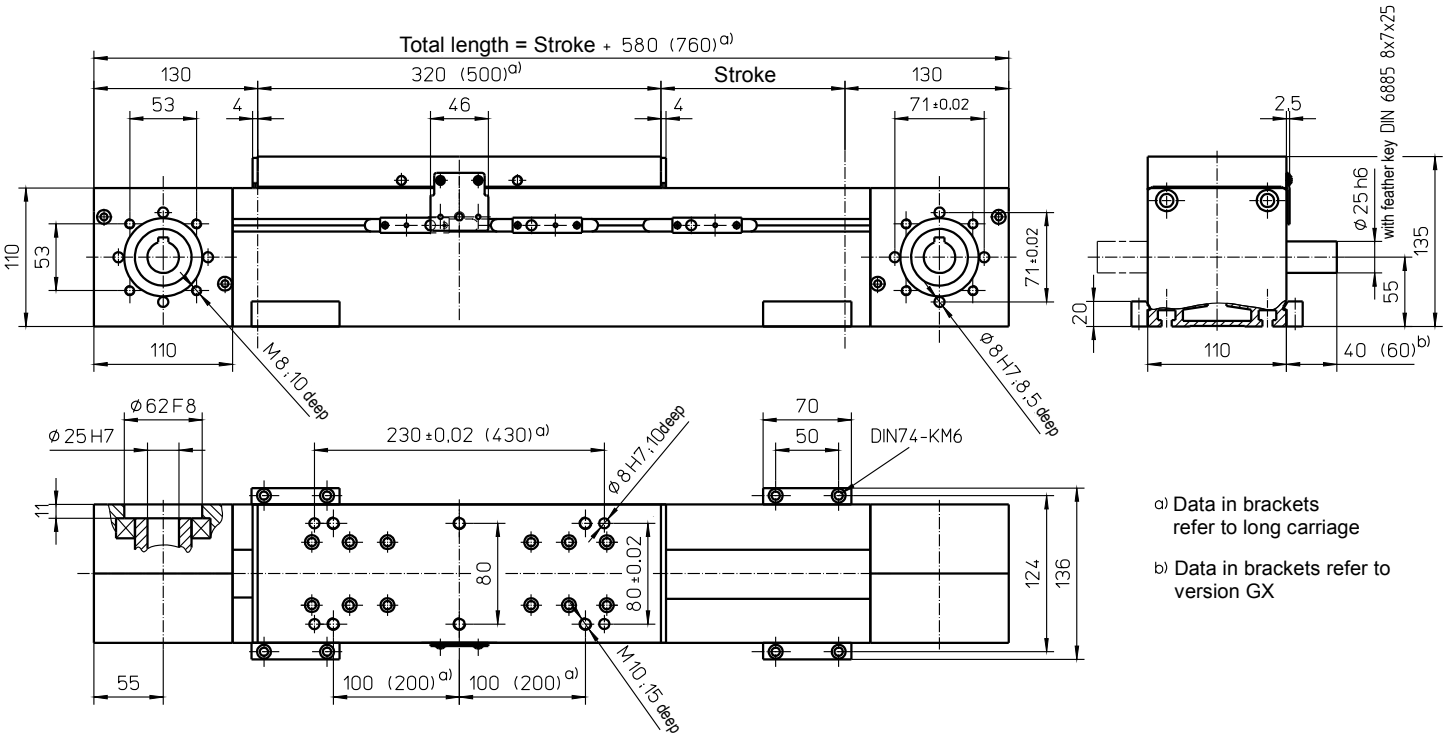

a) Data in brackets refer to long carriage

b) Data in brackets refer to version GX

Weights	ZRS	ZSS
Basic length without stroke:	15.70 kg	18.00 kg
100 mm stroke:	1.50 kg	2.10 kg
Entire carriage 320 mm:	4.80 kg	5.20 kg
Entire carriage 500 mm:	7.50 kg	8.20 kg

Max. total length: 8100 mm
(longer on request)

Technical Data	ZRS	ZSS
Max. speed:	8.00 m/s	5.00 m/s
Max. acceleration:	60 m/s²	
Repeat accuracy:	± 0.08 mm	
Idle torque:	3.50 Nm	
Moment of inertia:	$1.80 \cdot 10^{-2}$ kgm²	$1.60 \cdot 10^{-2}$ kgm²
Drive element:	Toothed belt **50 ATL10**	
Stroke per revolution:	300 mm	

Forces and moments

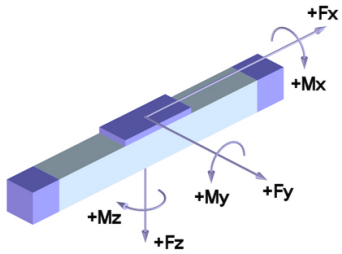

	ZRS	ZSS
Forces	Dynamic [N]	
F_x d)	4000	
F_Y	2000	3000
F_Z	5000	8000
$-F_Z$	2500	4000
Moments	Dynamic [Nm]	
M_X	300	400
M_Y	600 (800)	800 (1200)
M_Z	450 (550)	600 (800)

d) Maximum value (see diagram "F_X-v-Diagram")
Data in brackets refer to long carriage plate (500)

F_X - v - Diagram

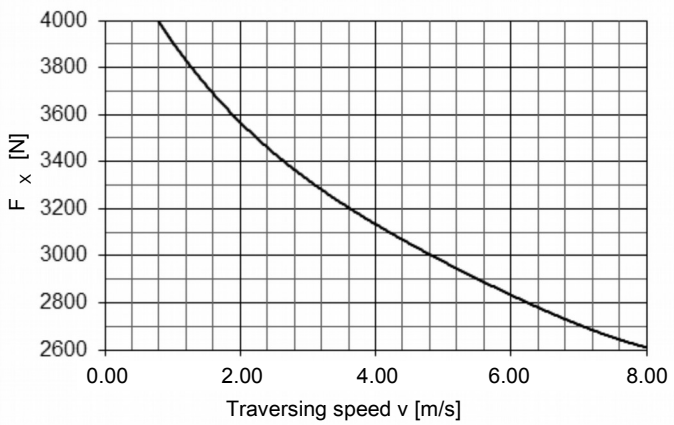

For mechanical linear drives with roller guide, the static load rating "C_{stat}" applies for static loads.

with toothed belt drive and roller guide (ARS) or rail guide (ASS)

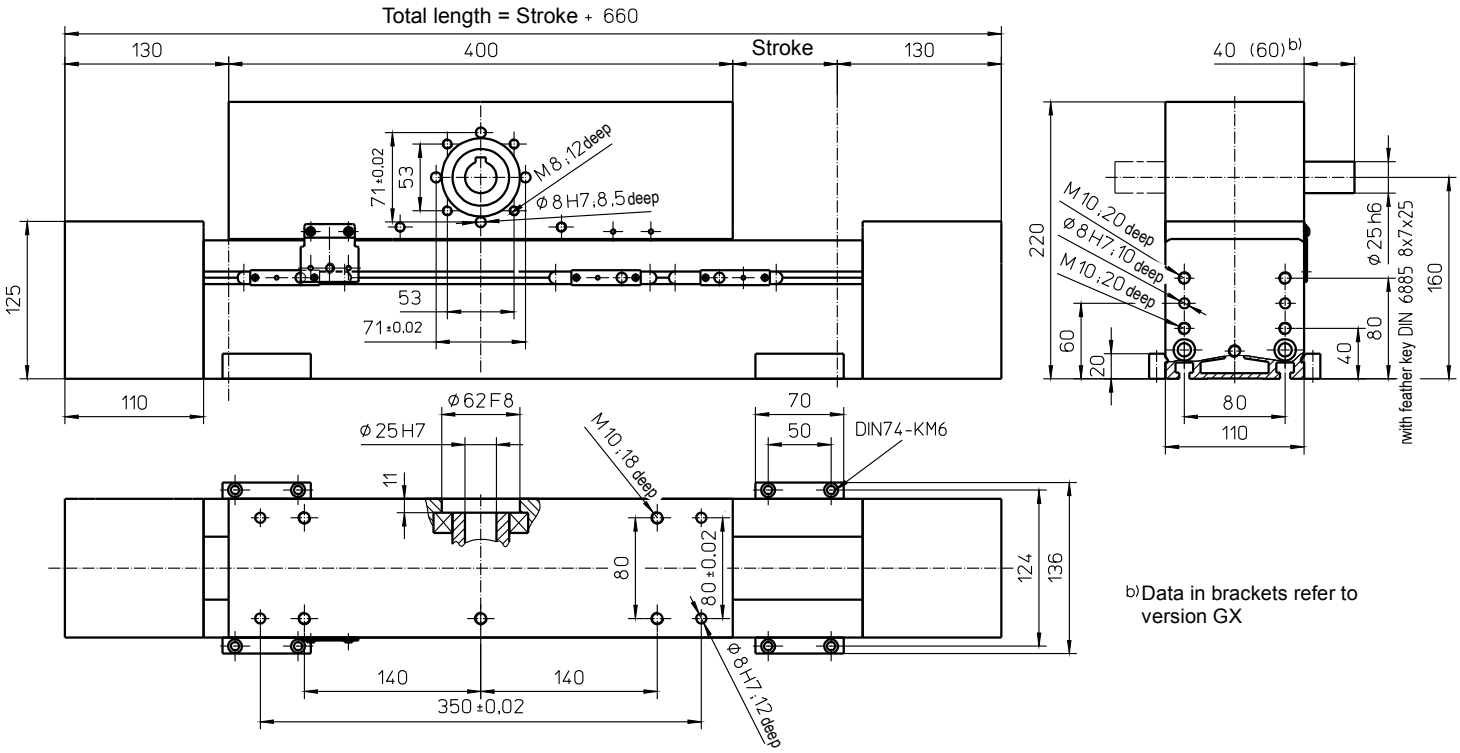

b) Data in brackets refer to version GX

Weights	ARS	ASS
Basic length without stroke:	27.00 kg	29.00 kg
100 mm stroke:	1.20 kg	1.40 kg
Carriage drive 400 mm:	15.00 kg	16.00 kg
Max. total length: (longer on request)	8100 mm	

Technical Data	ARS	ASS
Max. speed:	8.00 m/s	5.00 m/s
Max. acceleration:	60 m/s²	
Repeat accuracy:	± 0.08 mm	
Idle torque:	3.50 Nm	
Moment of inertia:	$3.50 \cdot 10^{-2}$ kgm²	$3.70 \cdot 10^{-2}$ kgm²
Drive element:	Toothed belt **50 ATL10**	
Stroke per revolution:	300 mm	

Forces and moments

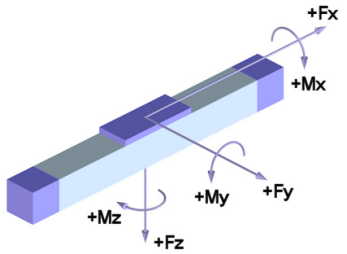

	ARS	ASS
Forces	Dynamic [N]	
F_x d)	2000	
F_Y	2000	3000
F_Z	5000	8000
$-F_Z$	2500	4000
Moments	Dynamic [Nm]	
M_X	300	400
M_Y	600	800
M_Z	450	600

d) Maximum value (see diagram "F_X-v-Diagram")

F_X - v - Diagram

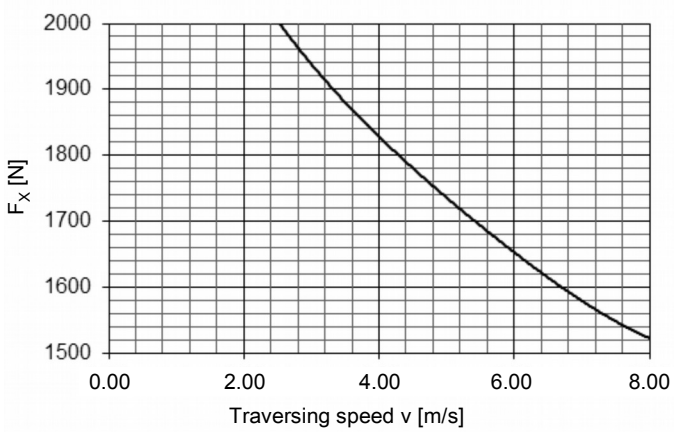

For mechanical linear drives with roller guide, the static load rating "C_{stat}" applies for static loads.

Release: 05.11.2010

with ball screw (KGT) and roller guide (SRS) or rail guide (SSS)

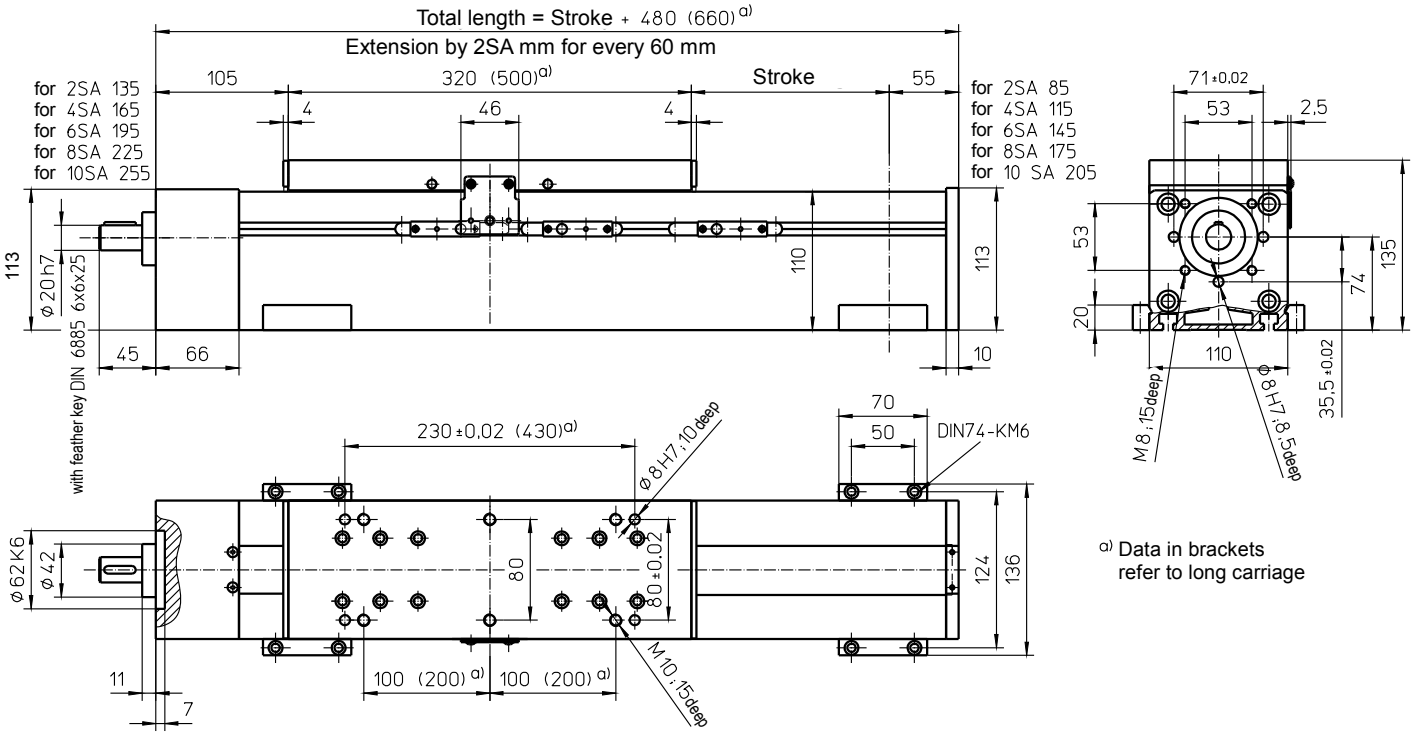

a) Data in brackets refer to long carriage

Weights	SRS	SSS
Basic length without stroke:	12.50 kg	13.50 kg
100 mm stroke:	1.40 kg	1.70 kg
Entire carriage 320 mm:	5.80 kg	5.30 kg
Entire carriage 500 mm:	9.10 kg	8.30 kg

Max. total length: 5600 mm
(longer on request)

Technical Data	SRS	SSS
Max. speed:	2.50 m/s	
Max. acceleration:	20 m/s²	
Repeat accuracy:	± 0.03 mm (KGT)	
Idle torque:	1.00 Nm	1.50 Nm

Forces and moments

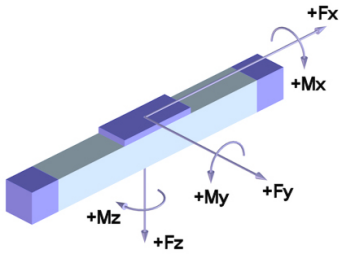

Drive element	KGT
Max. rotation speed:	3000 min^{-1}
Diameter:	25 mm
Pitch:	5 / 10 / 25 / 50 mm
Moment of inertia:	2.25 •10^{-4} kgm²/m

	SRS	SSS
Forces	Dynamic [N]	
F_X	6000	
F_Y	2000	3000
F_Z	5000	8000
$-F_Z$	2500	4000
Moments	Dynamic [Nm]	
M_X	300	400
M_Y	600 (800)	800 (1200)
M_Z	450 (550)	600 (800)

Data in brackets refer to long carriage plate (500)

Spindle support (SA)

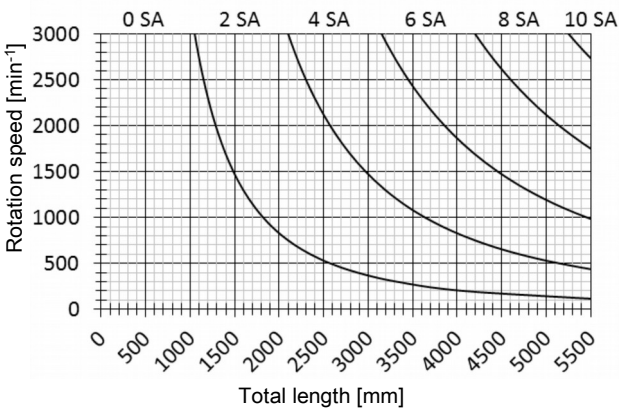

For mechanical linear drives with roller guide,
the static load rating "C_{stat}" applies for static loads.

Special design: Spindle support with damping ring (extension of total length: 10 mm for every 2 SA)

Version with double nut ("MM") only available with pitch "5", "10" and "25".

with ball screw (KGT) and sliding guide (SGV)

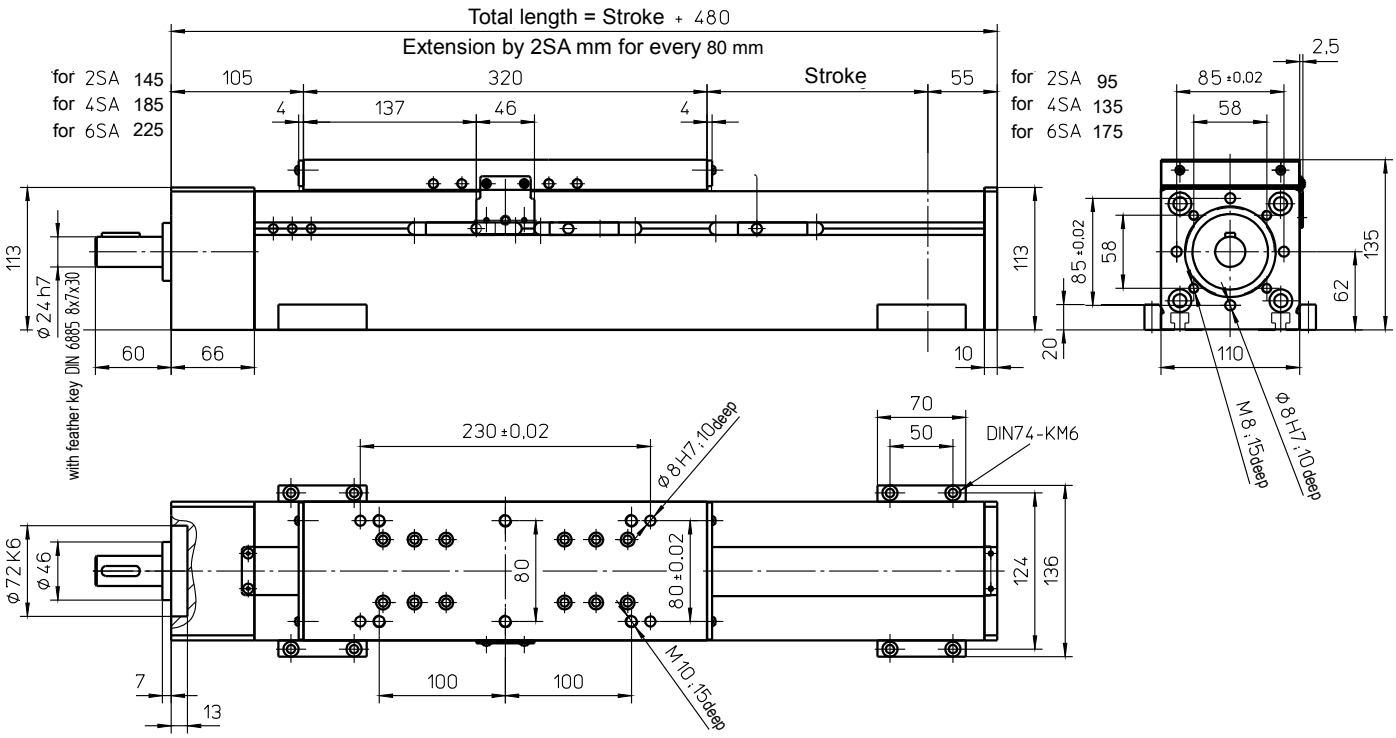

Weights	SGV
Basic length without stroke:	15.40 kg
100 mm stroke:	2.25 kg
Entire carriage 320 mm:	6.00 kg
Max. total length:	5600 mm

Technical Data	SGV
Max. speed:	3.0 m/s
Max. acceleration:	20 m/s²
Repeat accuracy:	± 0.03 mm (KGT)
Idle torque:	1.50 Nm

Forces and moments

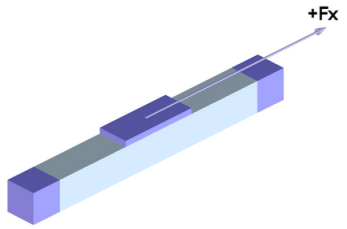

Drive element	KGT
Max. rotation speed:	3000 min^{-1}
Diameter:	32 / 40 mm
Pitch:	5 / 10 / 20 / 40 / 60* mm
Moment of inertia:	6.45 •10^{-4} kgm²/m (32)
	1.65 • 10^{-3} kgm²/m (40)

* only ø32

	SGV
Forces	Dynamic [N]
F_X	16000*
F_Y	-
F_Z	-
$-F_Z$	-
Moments	Dynamic [Nm]
M_X	-
M_Y	-
M_Z	-

" -" => Must have an external guide.

Spindle support (SA)

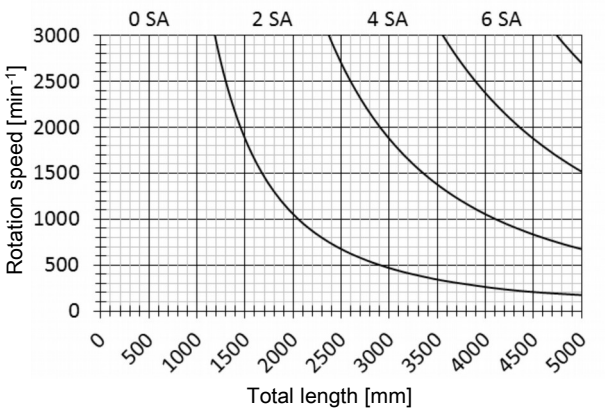

* at KGT3240: 12000 N

Special design: Spindle support with damping ring (extension of total length: 10 mm for every 2 SA)

Only single nut design ("M") possible.

with toothed belt drive and roller guide (ZRS) or rail guide (ZSS)

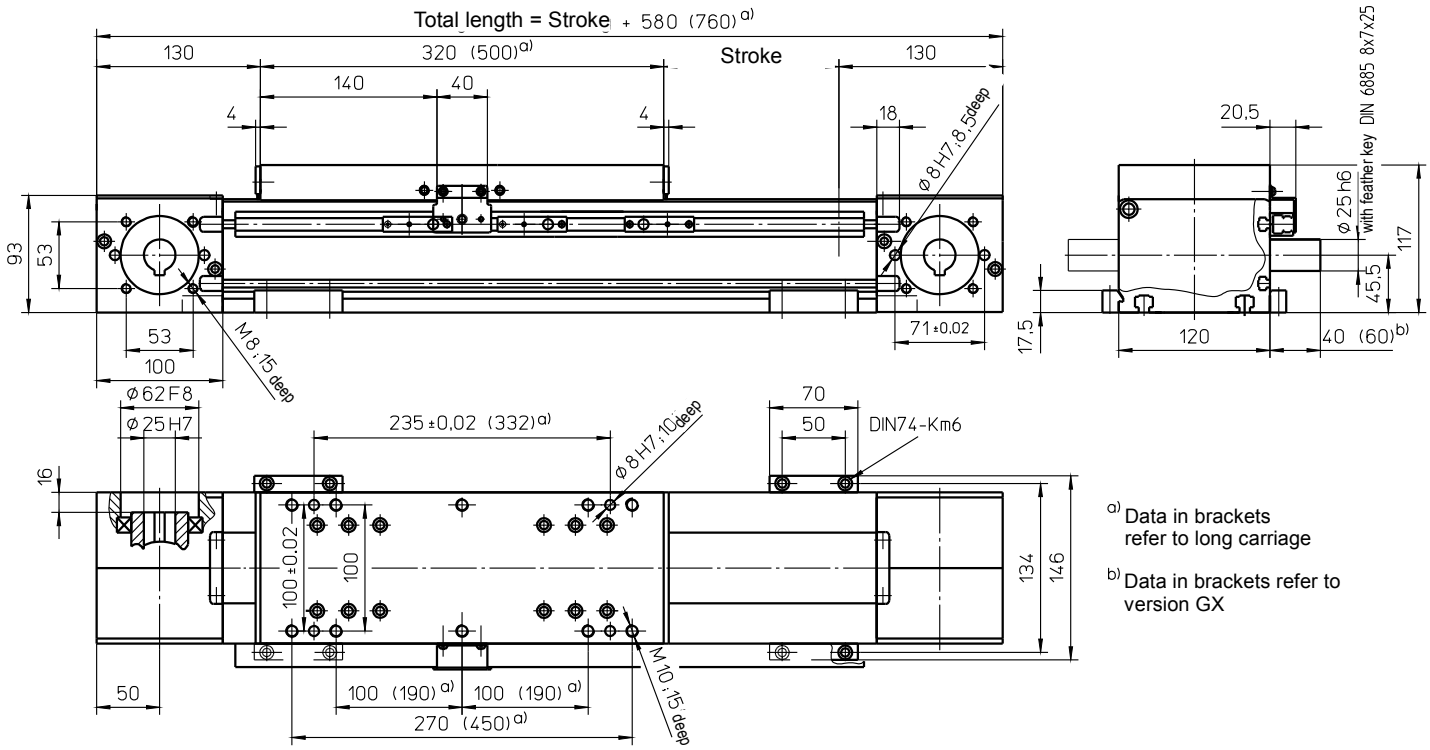

a) Data in brackets refer to long carriage

b) Data in brackets refer to version GX

Weights	ZRS	ZSS
Basic length without stroke:	12.50 kg	13.00 kg
100 mm stroke:	1.30 kg	1.70 kg
Entire carriage 320 mm:	6.00 kg	6.50 kg
Entire carriage 500 mm:	9.40 kg	10.20 kg

Max. total length: 8100 mm
(longer on request)

Technical Data	ZRS	ZSS
Max. speed:	8.00 m/s	5.00 m/s
Max. acceleration:	60 m/s²	
Repeat accuracy:	± 0.08 mm	
Idle torque:	3.20 Nm	
Moment of inertia:	$1.50 \cdot 10^{-2}$ kgm²	$1.60 \cdot 100^{-2}$ kgm²
Drive element:	Toothed belt **50 ATL10**	
Stroke per revolution:	240 mm	

Forces and moments

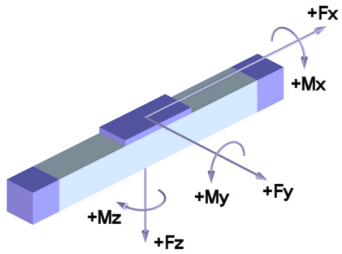

	ZRS	ZSS
Forces	Dynamic [N]	
F_x d)	4000	
F_Y	2500	3000
F_Z	6000	8000
$-F_Z$	3000	4000
Moments	Dynamic [Nm]	
M_X	350	400
M_Y	700 (1000)	1200 (1500)
M_Z	500 (1000)	600 (800)

d) Maximum value (see diagram "F_X-v-Diagram")
Data in brackets refer to long carriage plate (500)

F_X - v - Diagram

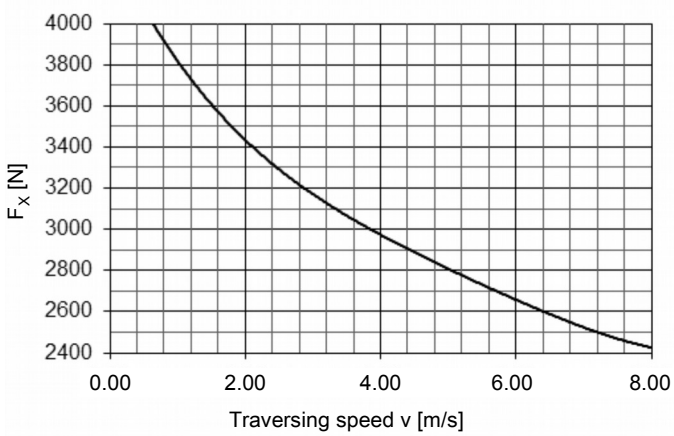

with toothed belt drive and rail guide (ZSS)

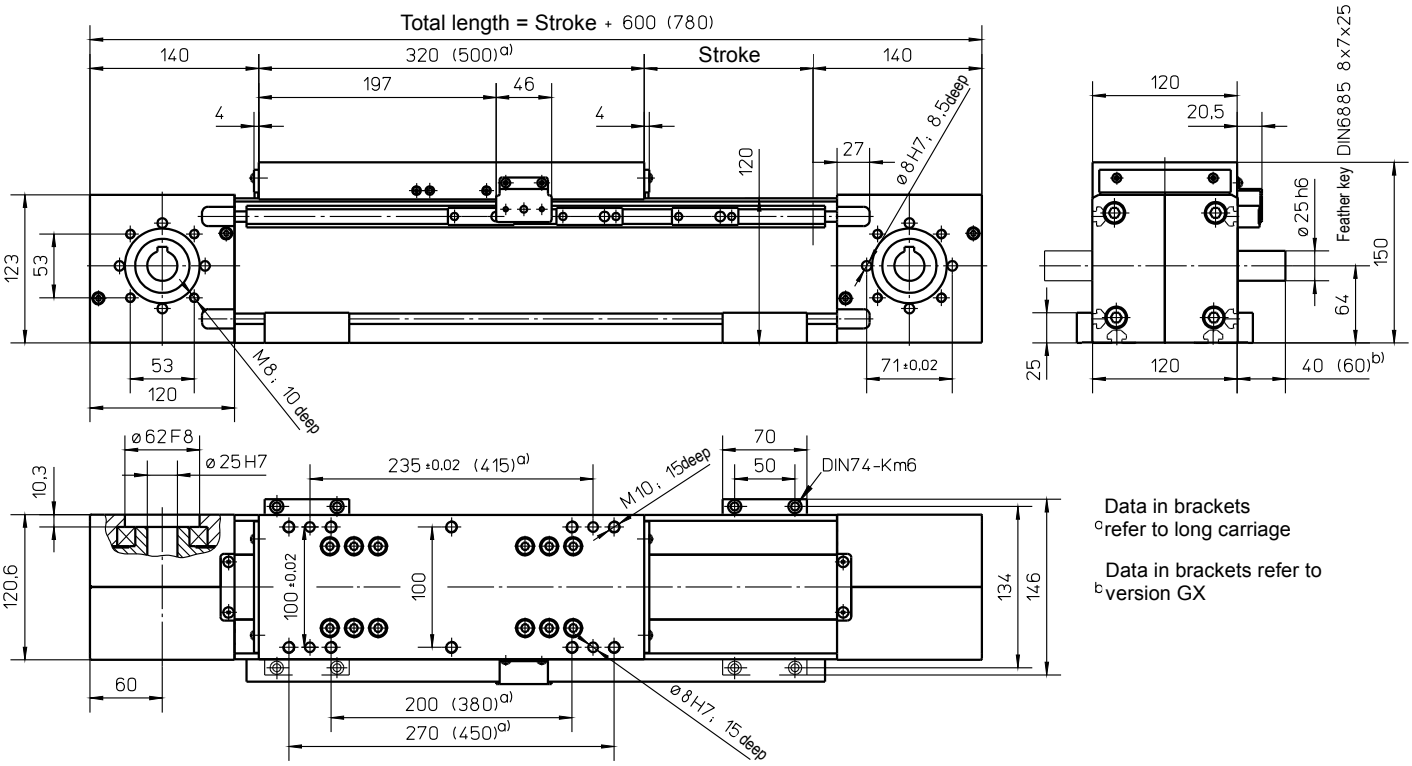

Data in brackets
[c]refer to long carriage

Data in brackets refer to
[b]version GX

Weights	ZSS
Basic length without stroke:	21.0 kg
100 mm stroke:	2.40 kg
Entire carriage 320 mm:	8.00 kg
Entire carriage 500 mm:	12.00 kg
Max. total length: (longer on request)	8100 mm

Technical Data	ZSS
Max. speed:	5.00 m/s
Max. acceleration:	60 m/s²
Repeat accuracy:	± 0.08 mm
Idle torque:	4.50 Nm
Moment of inertia:	2.10 •10 $^{-2}$ kgm²
Drive element:	Toothed belt 60 **ATL10**
Stroke per revolution:	300 mm

Forces and moments

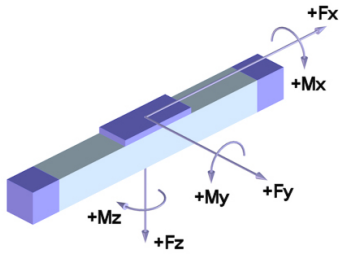

	ZSS
Forces	Dynamic [N]
F_x [d)]	4800
F_Y	4000
F_Z	12000
$-F_Z$	6000
Moments	Dynamic [Nm]
M_X	600
M_Y	1500 (2800)
M_Z	1000 (1800)

[d)] Maximum value (see diagram "F_X-v-Diagram")
Data in brackets refer to long carriage plate (500)

F_X - v - Diagram

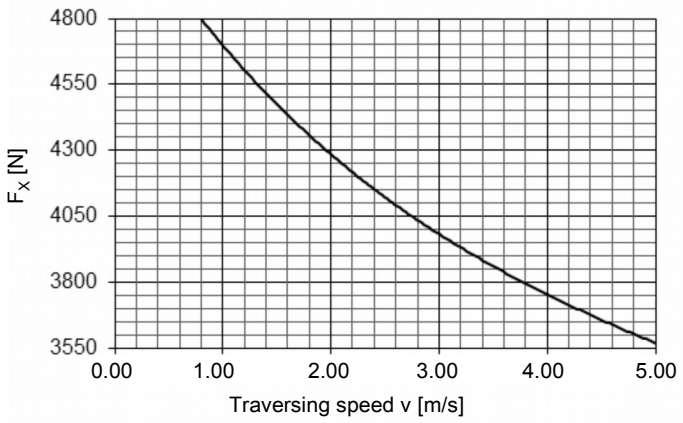

Release: 05.11.2010

with ball screw (KGT) or rail guide (ZSS)

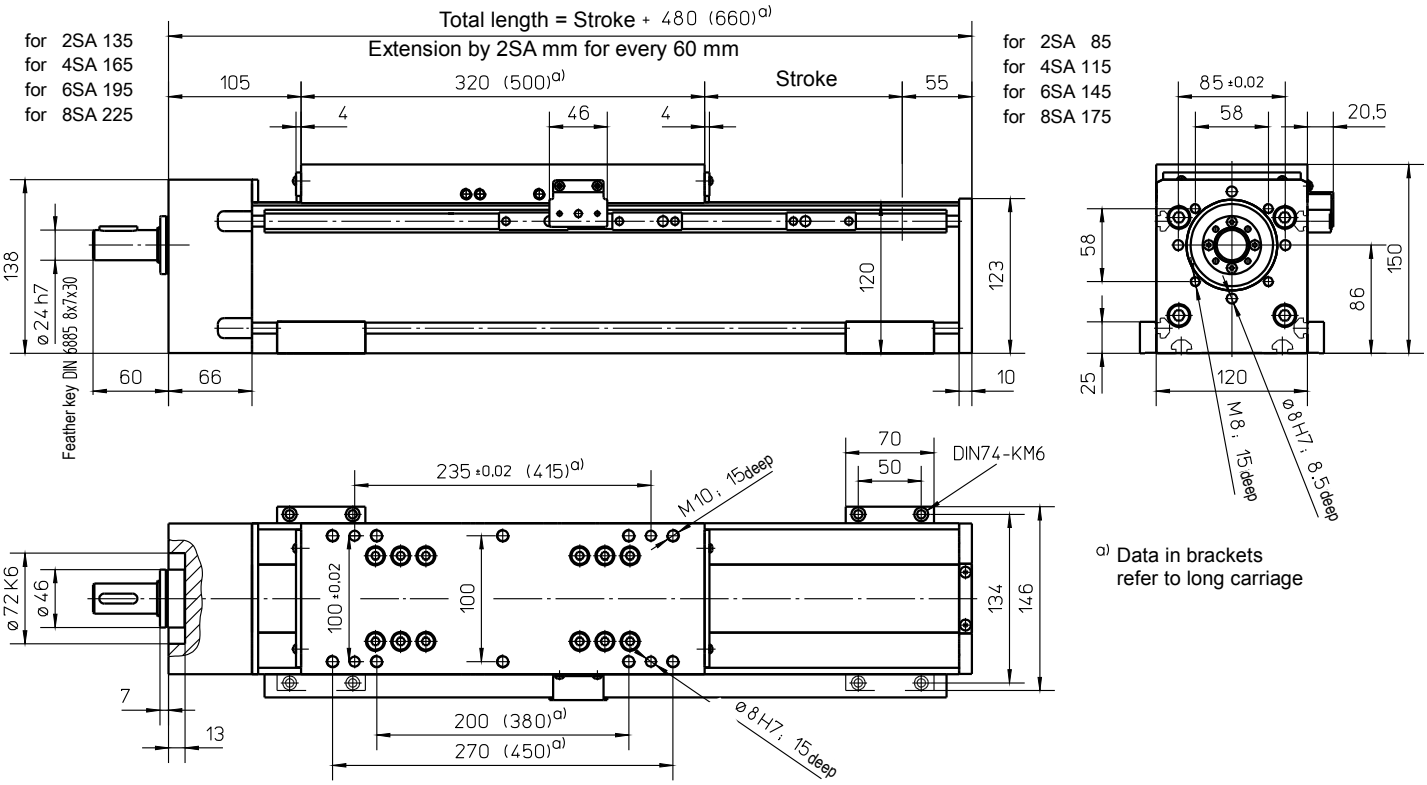

a) Data in brackets refer to long carriage

Weights	SSS
Basic length without stroke:	22.00 kg
100 mm stroke:	2.70 kg
Entire carriage 320 mm:	8.00 kg
Entire carriage 500 mm:	12.00 kg
Max. total length: (longer on request)	5600 mm

Technical Data	SSS
Max. speed:	3.00 m/s
Max. acceleration:	20 m/s²
Repeat accuracy:	± 0.03 mm (KGT)
Idle torque:	2.00 Nm

Forces and moments

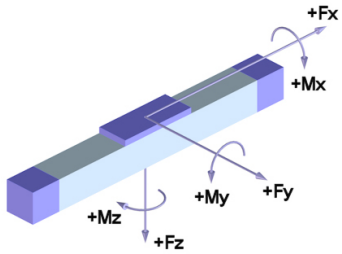

	SSS
Forces	Dynamic [N]
F_X	12000
F_Y	4000
F_Z	12000
$-F_Z$	6000
Moments	Dynamic [Nm]
M_X	600
M_Y	1500 (2800)
M_Z	1000 (1800)

Data in brackets refer to long carriage plate (500)

Drive element	KGT
Max. rotation speed:	3000 min^{-1}
Diameter:	32 mm
Pitch:	5 / 10 / 20 / 40 / 60 mm
Moment of inertia:	6.45 •10^{-4} kgm²/m

Spindle support (SA)

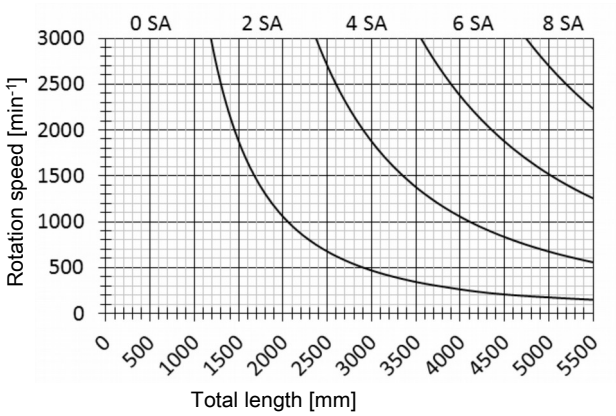

Special design: Spindle support with damping ring (extension of total length: 10 mm for every 2 SA)

Version with double nut (“MM”) only available with long carriage (500 mm) and pitch “5”, “10” or “20”.

with toothed belt drive and roller guide (ZRS) or double linear guide (ZSS)

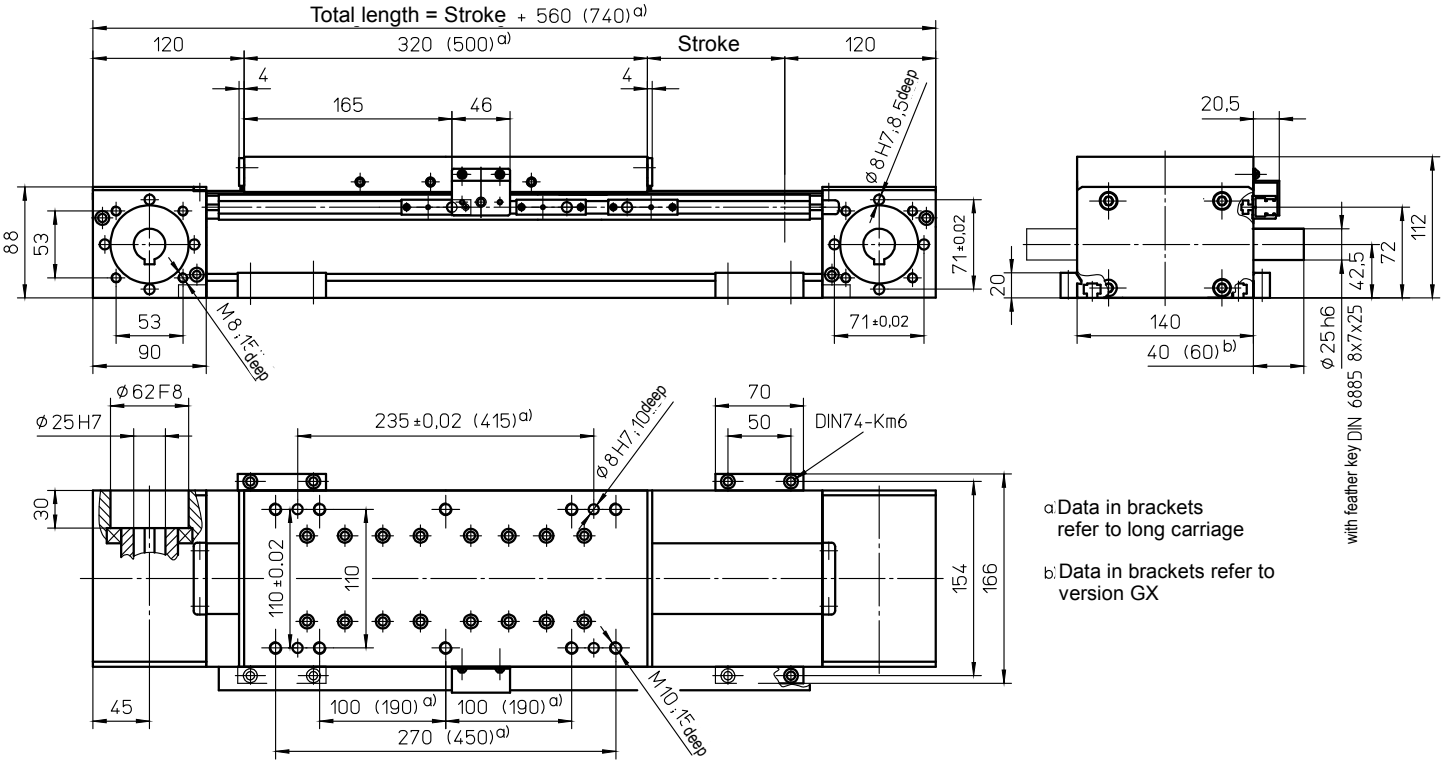

a: Data in brackets refer to long carriage

b: Data in brackets refer to version GX

Weights	ZRS	ZSS
Basic length without stroke:	13.50 kg	15.00 kg
100 mm stroke:	1.30 kg	1.70 kg
Entire carriage 320 mm:	7.00 kg	7.50 kg
Entire carriage 500 mm:	11.00 kg	11.70 kg

Max. total length: 8100 mm
(longer on request)

Technical Data	ZRS	ZSS
Max. speed:	8.00 m/s	5.00 m/s
Max. acceleration:	60 m/s²	
Repeat accuracy:	± 0.08 mm	
Idle torque:	3.50 Nm	
Moment of inertia:	$1.90 \cdot 10^{-2}$ kgm²	$2.00 \cdot 10^{-2}$ kgm²
Drive element:	Toothed belt **50 AT10-E**	
Stroke per revolution:	220 mm	

Forces and moments

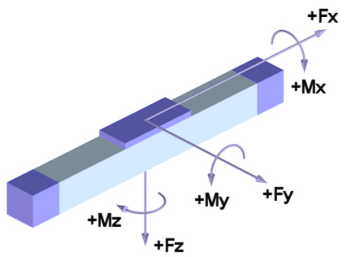

	ZRS	ZSS
Forces	Dynamic [N]	
F_x d)	4000	
F_Y	2500	
F_Z	5000	6000
$-F_Z$	3000	4000
Moments	Dynamic [Nm]	
M_X	350	500
M_Y	700 (900)	1000 (1300)
M_Z	500 (900)	1000 (1300)

d) Maximum value (see diagram "F_X-v-Diagram")
Data in brackets refer to long carriage plate (500)

F_X - v - Diagram

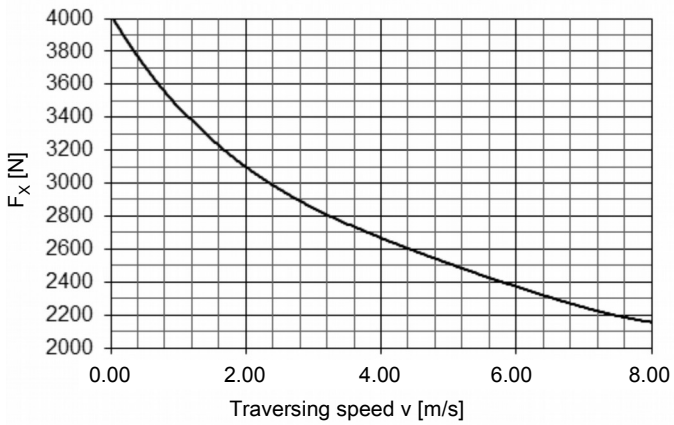

For mechanical linear drives with roller guide,
the static load rating "C_{stat}" applies for static loads.

Release: 14.11.2014

with toothed belt drive and roller guide (ARS) or double linear guide (ASS)

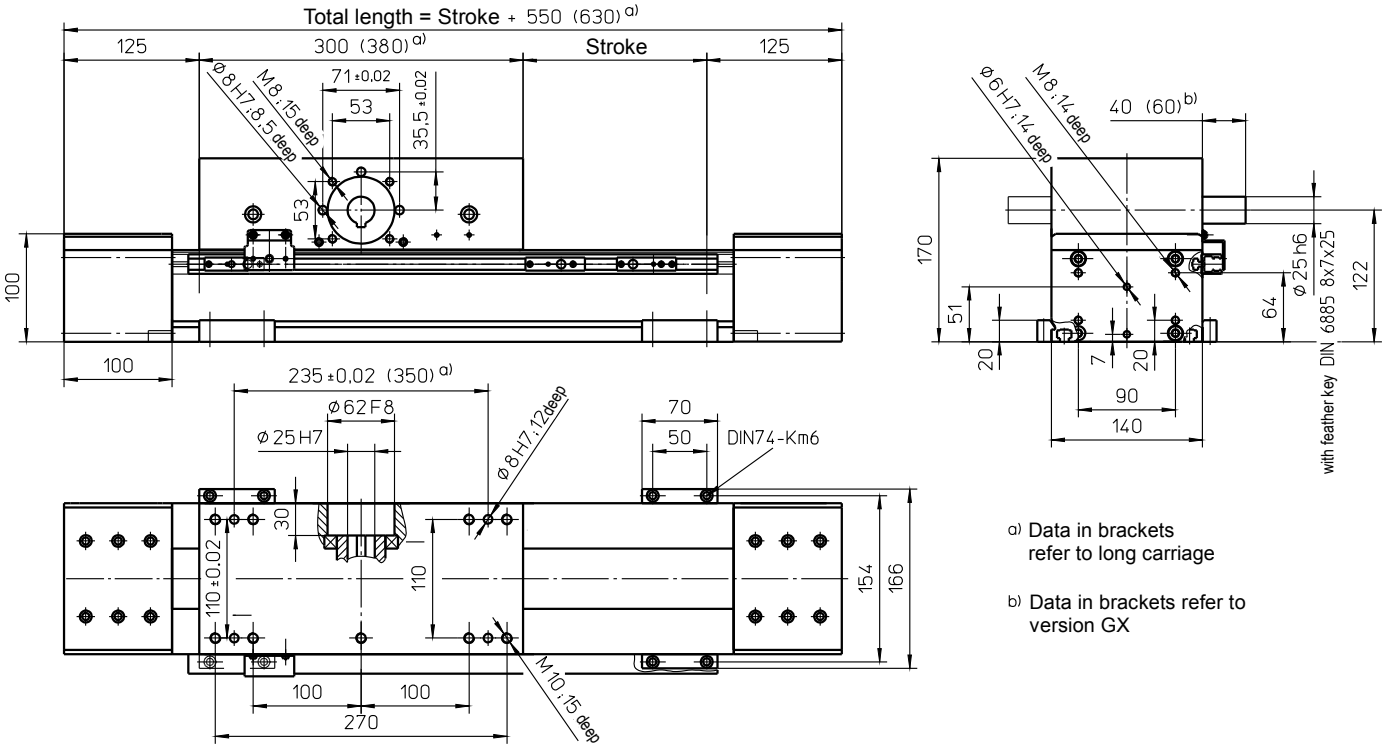

a) Data in brackets refer to long carriage

b) Data in brackets refer to version GX

Weights	ARS	ASS
Basic length without stroke:	28.00 kg	30.00 kg
100 mm stroke:	1.20 kg	1.50 kg
Carriage drive 300 mm:	10.70 kg	11.70 kg
Carriage drive 380 mm:	13.00 kg	14.00 kg

Max. total length: 8100 mm
(longer on request)

Technical Data	ARS	ASS
Max. speed:	8.00 m/s	5.00 m/s
Max. acceleration:	60 m/s²	
Repeat accuracy:	± 0.08 mm	
Idle torque:	3.50 Nm	
Moment of inertia:	$3.50 \cdot 10^{-2}$ kgm²	$3.70 \cdot 10^{-2}$ kgm²
Drive element:	Toothed belt **50 AT10-E**	
Stroke per revolution:	240 mm	

Forces and moments

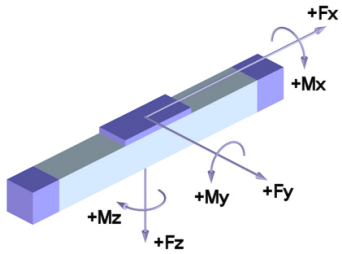

	ARS	ASS
Forces	Dynamic [N]	
F_x d)	2500	
F_Y	2500	
F_Z	5000	6000
$-F_Z$	3000	4000
Moments	Dynamic [Nm]	
M_X	350	500
M_Y	(700)	1000 (1300)
M_Z	(500)	1000 (1300)

d) Maximum value (see diagram "F_X-v-Diagram")
Data in brackets refer to long carriage (380)
Only long carriage (380) possible with "ARS"!

F_X - v - Diagram

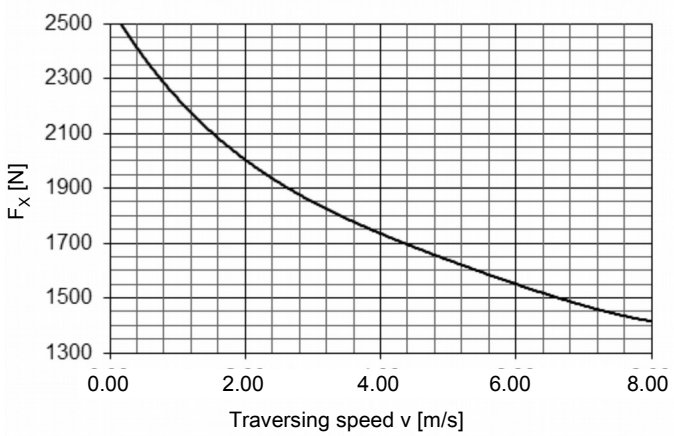

For mechanical linear drives with roller guide, the static load rating "C_{stat}" applies for static loads.

with ball screw (KGT) and roller guide (SRS) or double linear guide (SSS)

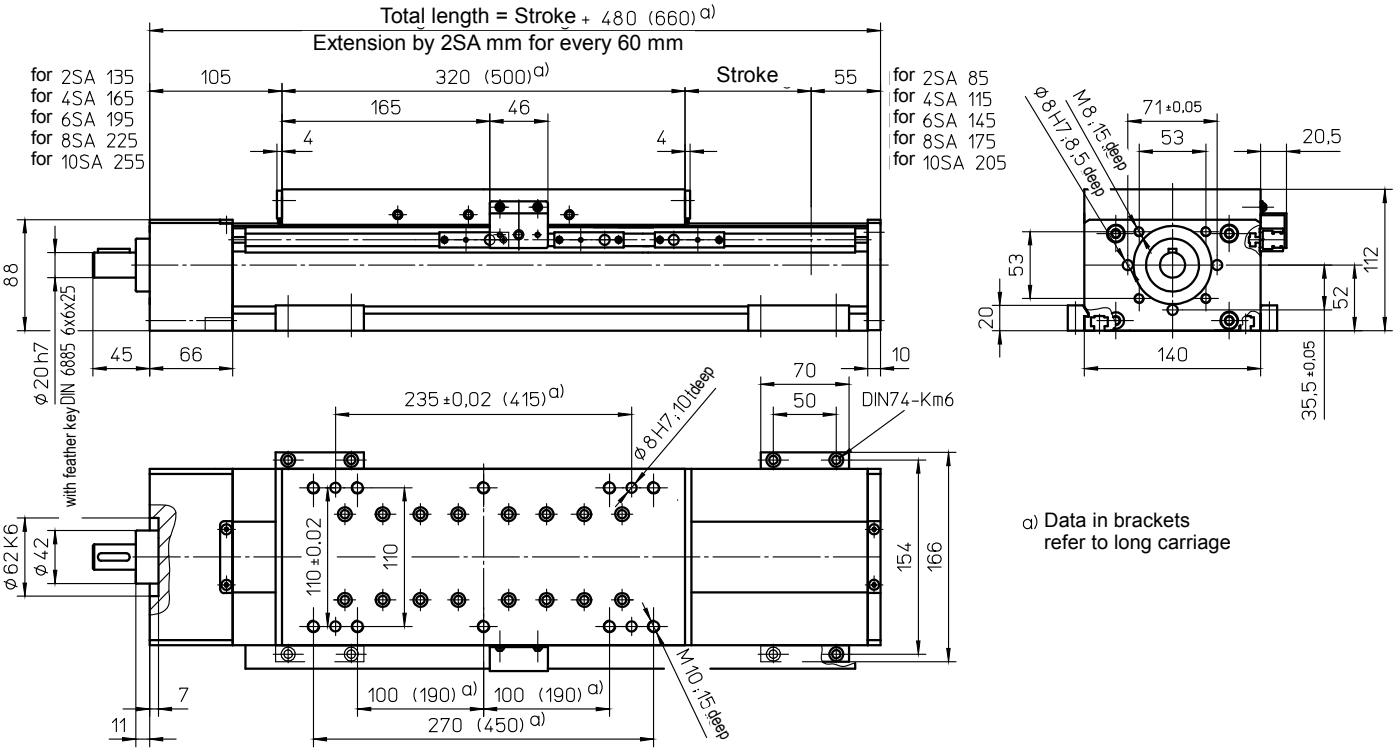

a) Data in brackets refer to long carriage

Weights	SRS	SSS
Basic length without stroke:	14.00 kg	15.00 kg
100 mm stroke:	1.40 kg	1.90 kg
Entire carriage 320 mm:	6.20 kg	7.00 kg
Entire carriage 500 mm:	9.70 kg	10.90 kg

Max. total length: 5600 mm
(longer on request)

Technical Data	SRS	SSS
Max. speed:	2.50 m/s	
Max. acceleration:	20 m/s²	
Repeat accuracy:	± 0.03 mm (KGT)	
Idle torque:	1.00 Nm	1.50 Nm

Forces and moments

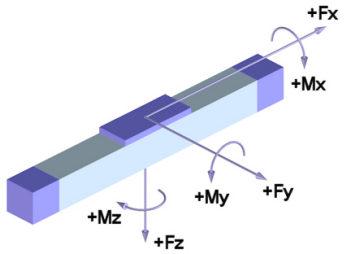

	SRS	SSS
Forces	Dynamic [N]	
F_X	6000	
F_Y	2500	
F_Z	5000	6000
$-F_Z$	3000	4000
Moments	Dynamic [Nm]	
M_X	350	500
M_Y	700 (900)	1000 (1400)
M_Z	500 (900)	1000 (1400)

Data in brackets refer to long carriage plate (500)

Drive element	KGT
Max. rotation speed:	3000 min^{-1}
Diameter:	25 mm
Pitch:	5 / 10 / 25 / 50 mm
Moment of inertia:	3000 min-1

Spindle support (SA)

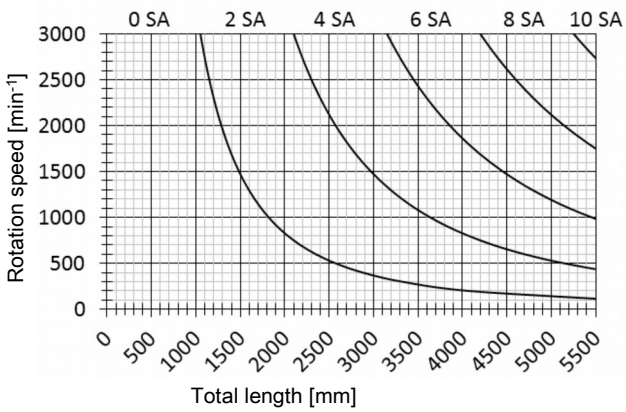

For mechanical linear drives with roller guide, the static load rating "C_{stat}" applies for static loads.

Special design: Spindle support with damping ring (extension of total length: 10 mm for every 2 SA)

Version with double nut ("MM") only available with long carriage (500) and not with pitch "50".

Release: 12.12.2016

with toothed belt drive and double linear guide (ZSS)

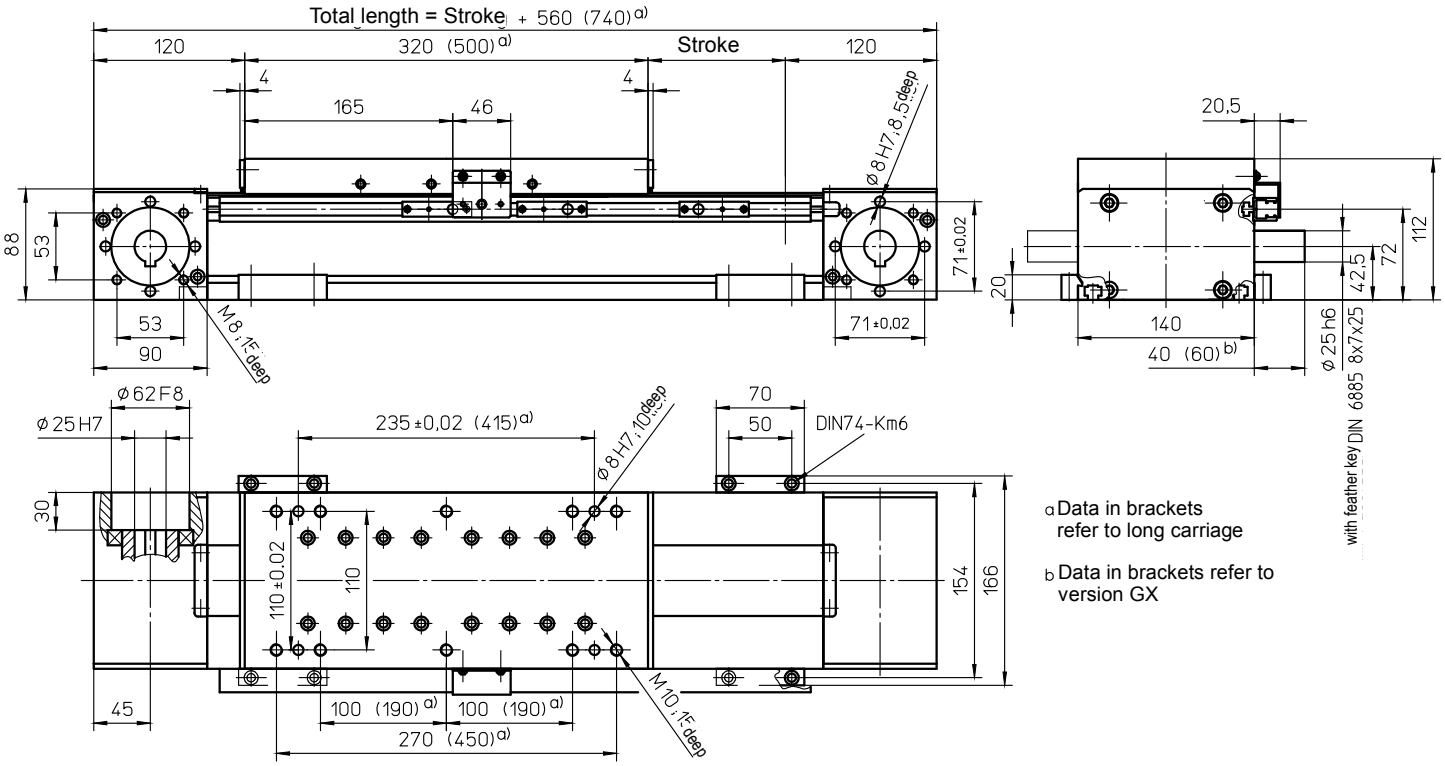

a Data in brackets refer to long carriage

b Data in brackets refer to version GX

Weights	ZSS
Basic length without stroke:	15.00 kg
100 mm stroke:	1.70 kg
Entire carriage 320 mm:	7.50 kg
Entire carriage 500 mm:	11.70 kg
Max. total length: (longer on request)	8100 mm

Technical Data	ZSS
Max. speed:	5.00 m/s
Max. acceleration:	60 m/s²
Repeat accuracy:	± 0.08 mm
Idle torque:	3.50 Nm
Moment of inertia:	2.00 •10^{-2} kgm²
Drive element:	Toothed belt **50 AT10-E**
Stroke per revolution:	220 mm

Forces and moments

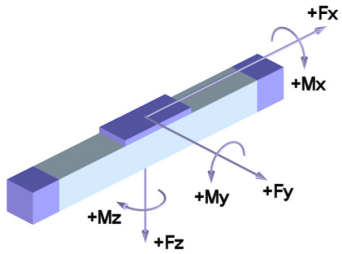

	ZSS
Forces	Dynamic [N]
F_x d)	4000
F_Y	3200
F_Z	7500
$-F_Z$	5000
Moments	Dynamic [Nm]
M_X	600
M_Y	1200 (1700)
M_Z	1200 (1700)

d) Maximum value (see diagram "F_X-v-Diagram")
Data in brackets refer to long carriage plate (500)

F_X - v - Diagram

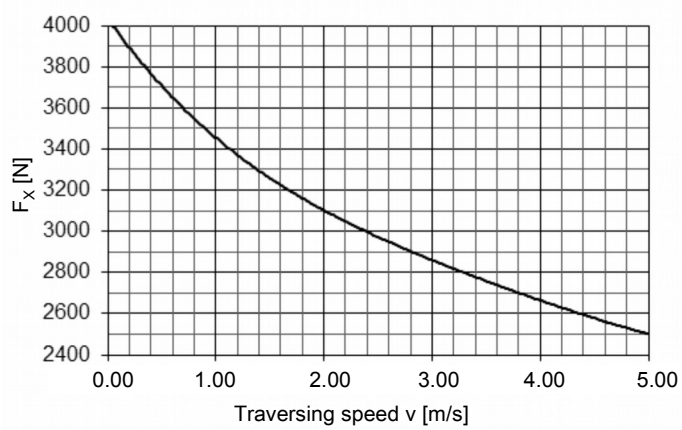

with toothed belt drive and double linear guide (ASS)

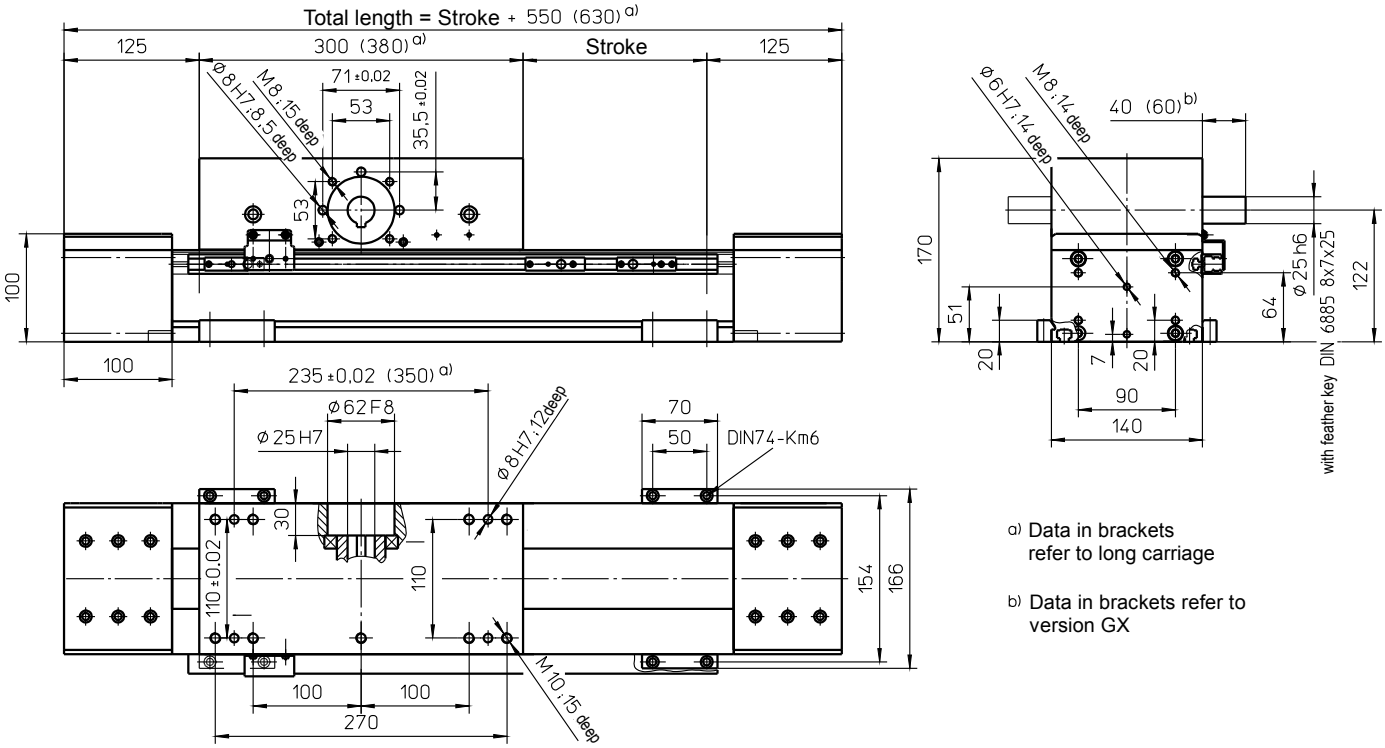

a) Data in brackets refer to long carriage

b) Data in brackets refer to version GX

Weights	ASS
Basic length without stroke:	30.00 kg
100 mm stroke:	1.50 kg
Carriage drive 300 mm:	11.70 kg
Carriage drive 380 mm:	14.00 kg
Max. total length: (longer on request)	8100 mm

Technical Data	ASS
Max. speed:	5.00 m/s
Max. acceleration:	60 m/s²
Repeat accuracy:	± 0.08 mm
Idle torque:	3.50 Nm
Moment of inertia:	3.70 •10^{-2} kgm²
Drive element:	Toothed belt **50 AT10-E**
Stroke per revolution:	240 mm

Forces and moments

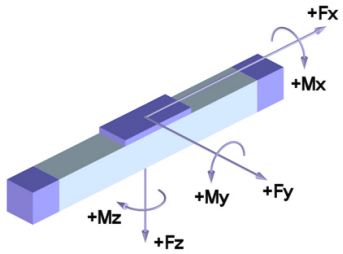

	ASS
Forces	Dynamic [N]
F_x d)	2500
F_Y	3200
F_Z	7500
$-F_Z$	5000
Moments	Dynamic [Nm]
M_X	600
M_Y	1200 (1600)
M_Z	1200 (1600)

d) Maximum value (see diagram "F_X-v-Diagram")
Data in brackets refer to long carriage plate (380)

F_X - v - Diagram

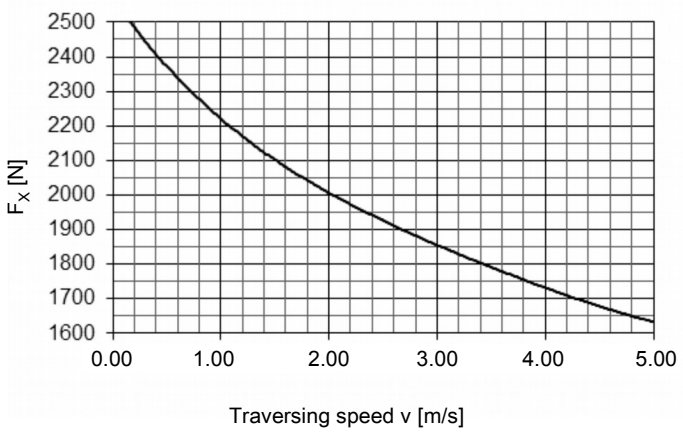

Release: 11.03.2011

with ball screw (KGT) and double linear guide (SSS)

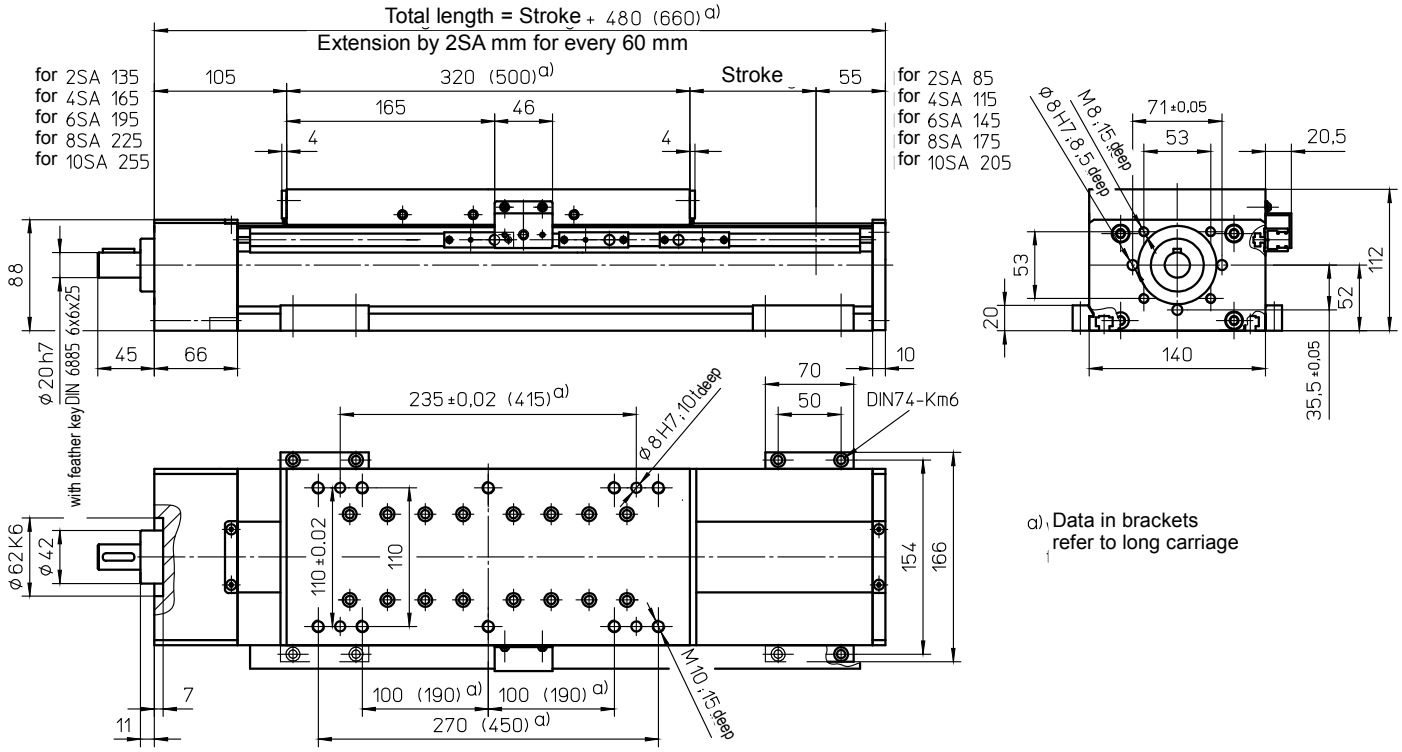

a) Data in brackets refer to long carriage

Weights	SSS
Basic length without stroke:	15.00 kg
100 mm stroke:	1.90 kg
Entire carriage 320 mm:	7.00 kg
Entire carriage 500 mm:	10.90 kg
Max. total length: (longer on request)	5600 mm

Technical Data	SSS
Max. speed:	2.50 m/s
Max. acceleration:	20 m/s²
Repeat accuracy:	± 0.03 mm (KGT)
Idle torque:	1.50 Nm

Forces and moments

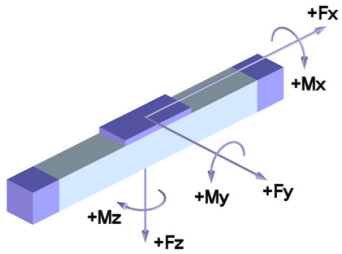

	SSS
Forces	Dynamic [N]
F_X	6000
F_Y	3200
F_Z	7500
$-F_Z$	5000
Moments	Dynamic [Nm]
M_X	600
M_Y	1200 (1700)
M_Z	1200 (1700)

Data in brackets refer to long carriage plate (500)

Drive element	KGT
Max. rotation speed:	3000 min^{-1}
Diameter:	25 mm
Pitch:	5 / 10 / 25 / 50 mm
Moment of inertia:	2.25 •10^{-4} kgm²/m

Spindle support (SA)

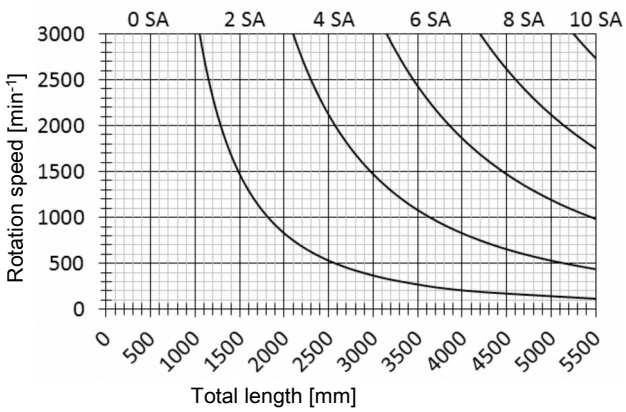

Special design: Spindle support with damping ring (extension of total length: 10 mm for every 2 SA)
Version with double nut (“MM”) only available with long carriage (500) and not with pitch “50”.

with toothed belt drive and rail guide (ZSS)

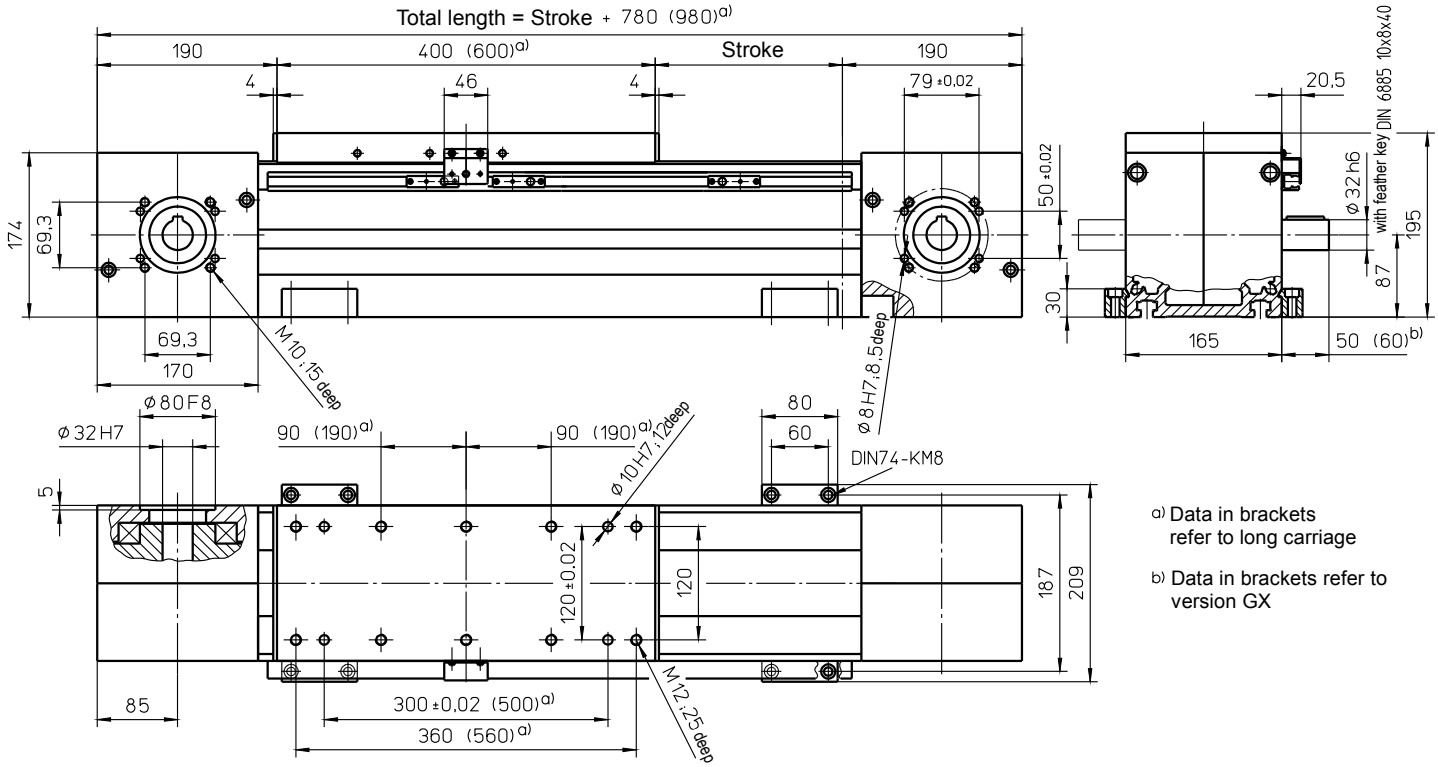

a) Data in brackets refer to long carriage

b) Data in brackets refer to version GX

Weights	ZSS
Basic length without stroke:	38.40 kg
100 mm stroke:	3.00 kg
Entire carriage 400 mm:	11.90 kg
Entire carriage 600 mm:	17.90 kg
Max. total length: (longer on request)	7700 mm

Technical Data	ZSS
Max. speed:	5.00 m/s
Max. acceleration:	60 m/s²
Repeat accuracy:	± 0.08 mm
Idle torque:	12.00 Nm
Moment of inertia:	8.50 •10^{-2} kgm²
Drive element:	Toothed belt **75 ATS 15**
Stroke per revolution:	450 mm

Forces and moments

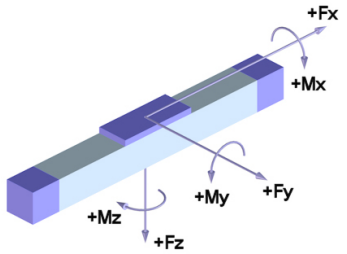

	ZSS
Forces	Dynamic [N]
F_x d)	10000
F_Y	5000
F_Z	15000
$-F_Z$	8000
Moments	Dynamic [Nm]
M_X	700
M_Y	1400 (2000)
M_Z	1100 (1500)

d) Maximum value (see diagram "F_X-v-Diagram")
Data in brackets refer to long carriage plate (600)

F_X - v - Diagram

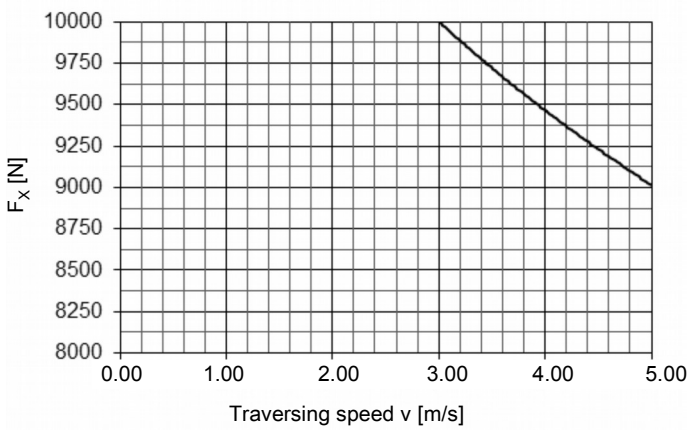

Profile design „S" at max. total length 5840 mm to 7700 mm (page B52)

Release: 06.08.2015

with ball screw (KGT) and rail guide (SSS)

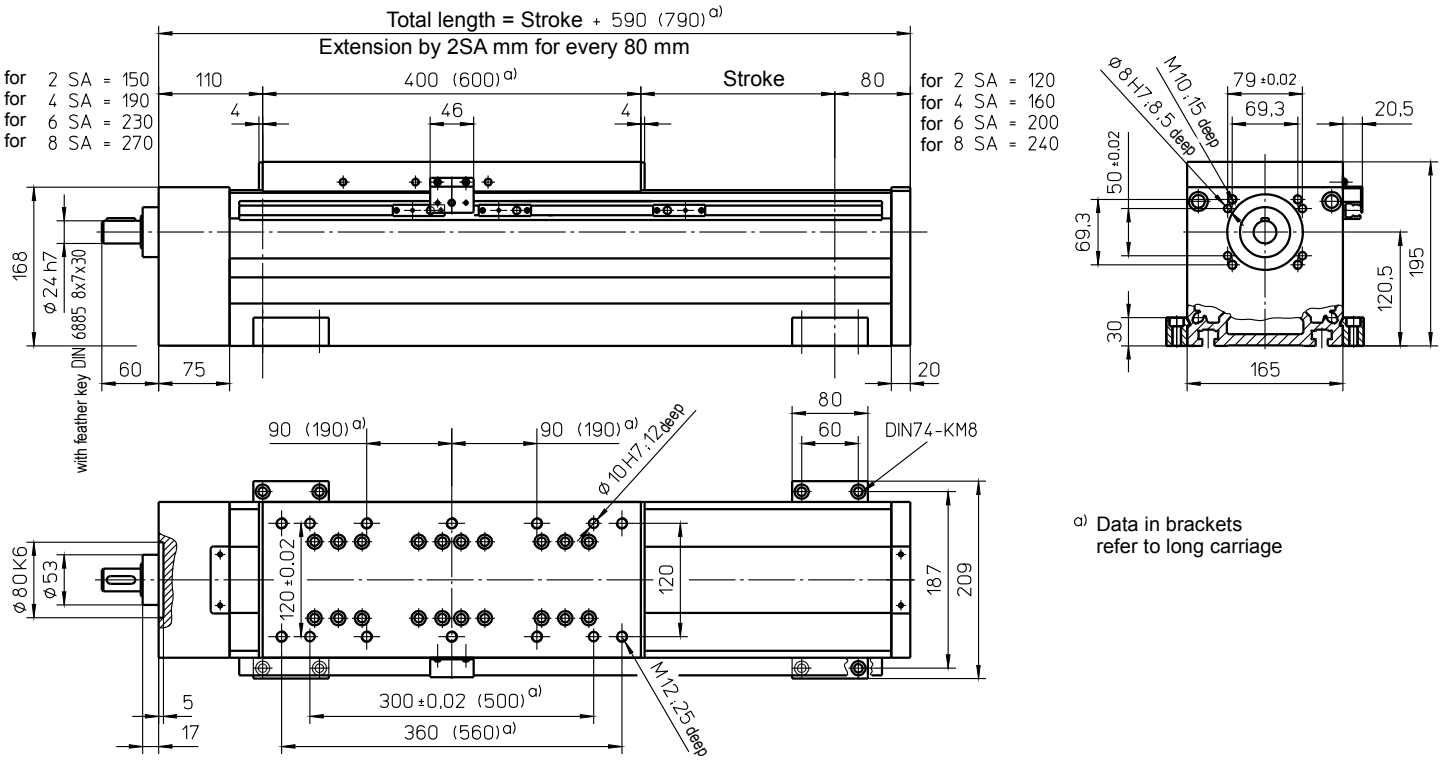

a) Data in brackets refer to long carriage

Weights	SSS
Basic length without stroke:	33.90 kg
100 mm stroke:	3.70 kg
Entire carriage 400 mm:	11.50 kg
Entire carriage 600 mm:	17.25 kg
Max. total length: (longer on request)	5600 mm

Technical Data	SSS
Max. speed:	2.00 m/s
Max. acceleration:	20 m/s²
Repeat accuracy:	± 0.03 mm (KGT)
Idle torque:	3.00 Nm

Forces and moments

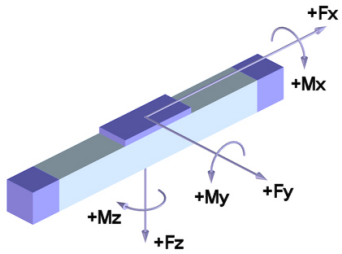

	SSS
Forces	Dynamic [N]
F_X	18000
F_Y	5000
F_Z	15000
$-F_Z$	8000
Moments	Dynamic [Nm]
M_X	800
M_Y	1800 (3000)
M_Z	1400 (2000)

Data in brackets refer to long carriage plate (600)

Drive element	KGT
Max. rotation speed:	3000 min^{-1}
Diameter:	40 mm
Pitch:	5 / 10 / 20 / 40 mm
Moment of inertia:	1.65 •10^{-3} kgm²/m

Spindle support (SA)

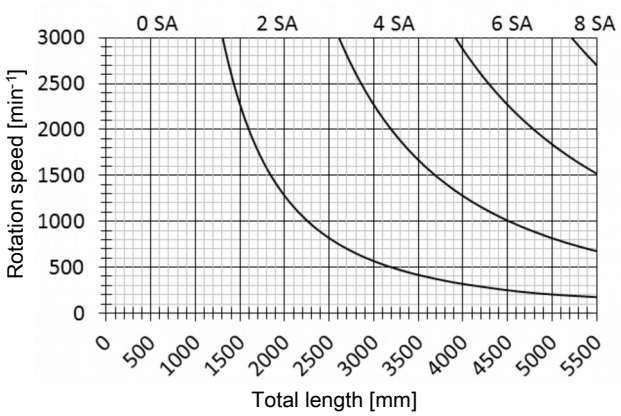

Special design: Spindle support with damping ring (extension of total length: 10 mm for every 2 SA)

with ball screw (KGT) and sliding guide (SGV)

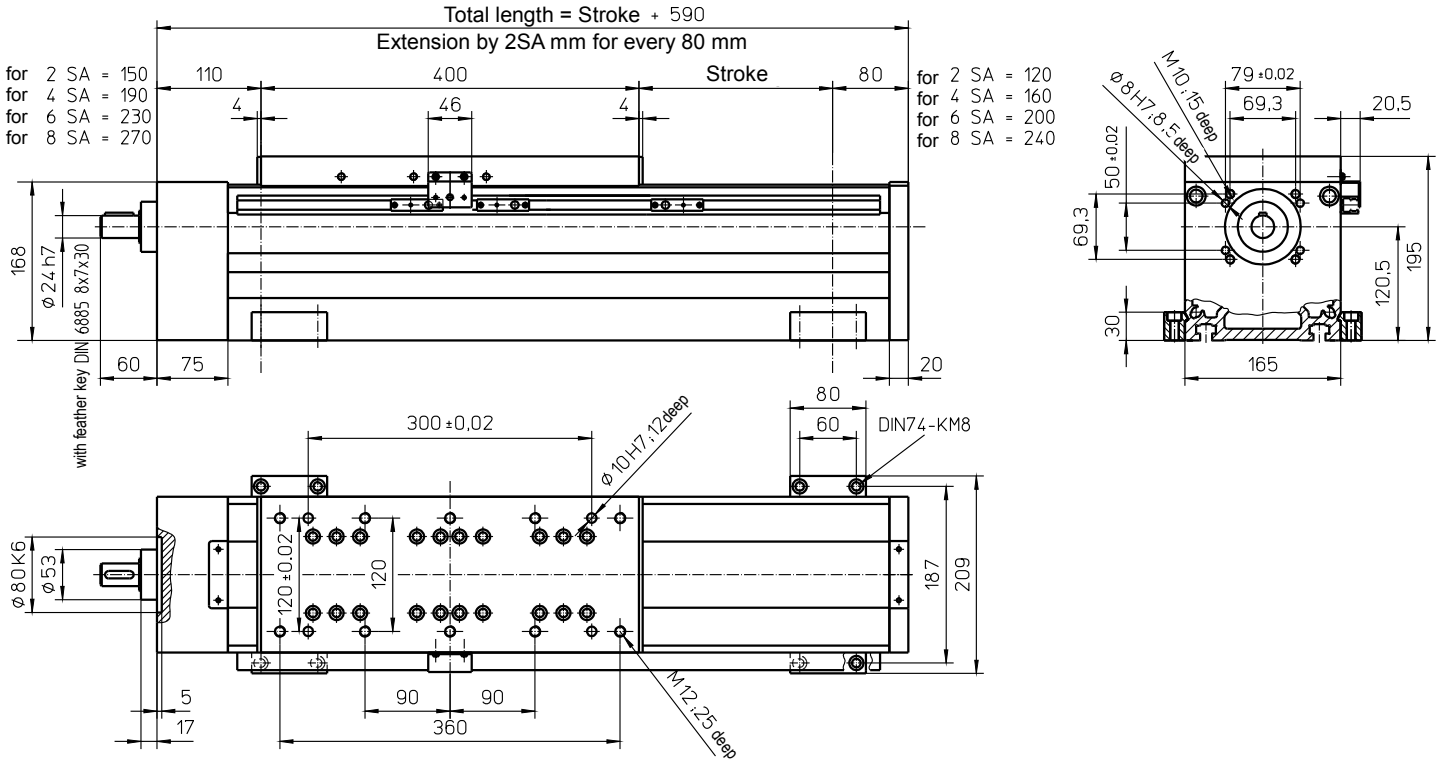

Weights	SGV
Basic length without stroke:	33.00 kg
100 mm stroke:	3.30 kg
Entire carriage 400 mm:	10.50 kg
Max. total length: (longer on request)	5600 mm

Technical Data	SGV
Max. speed:	2.00 m/s
Max. acceleration:	20 m/s²
Repeat accuracy:	± 0.03 mm (KGT)
Idle torque:	3.00 Nm

Forces and moments

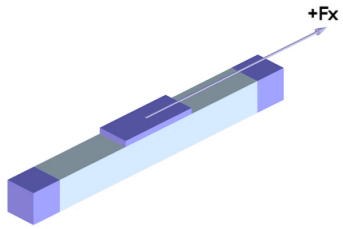

	SGV
Forces	Dynamic [N]
F_X	18000
F_Y	-
F_Z	-
$-F_Z$	-
Moments	Dynamic [Nm]
M_X	-
M_Y	-
M_Z	-

" -" => Must have an external guide.

Drive element	KGT
Max. rotation speed:	3000 min^{-1}
Diameter:	40 mm
Pitch:	5 / 10 / 20 / 40 mm
Moment of inertia:	1.65 •10^{-3} kgm²/m

Spindle support (SA)

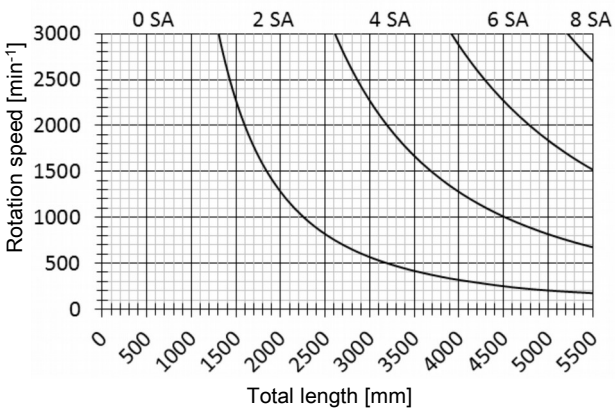

Special design: Spindle support with damping ring (extension of total length: 10 mm for every 2 SA)

with ball screw (KGT) and sliding guide (SGV)

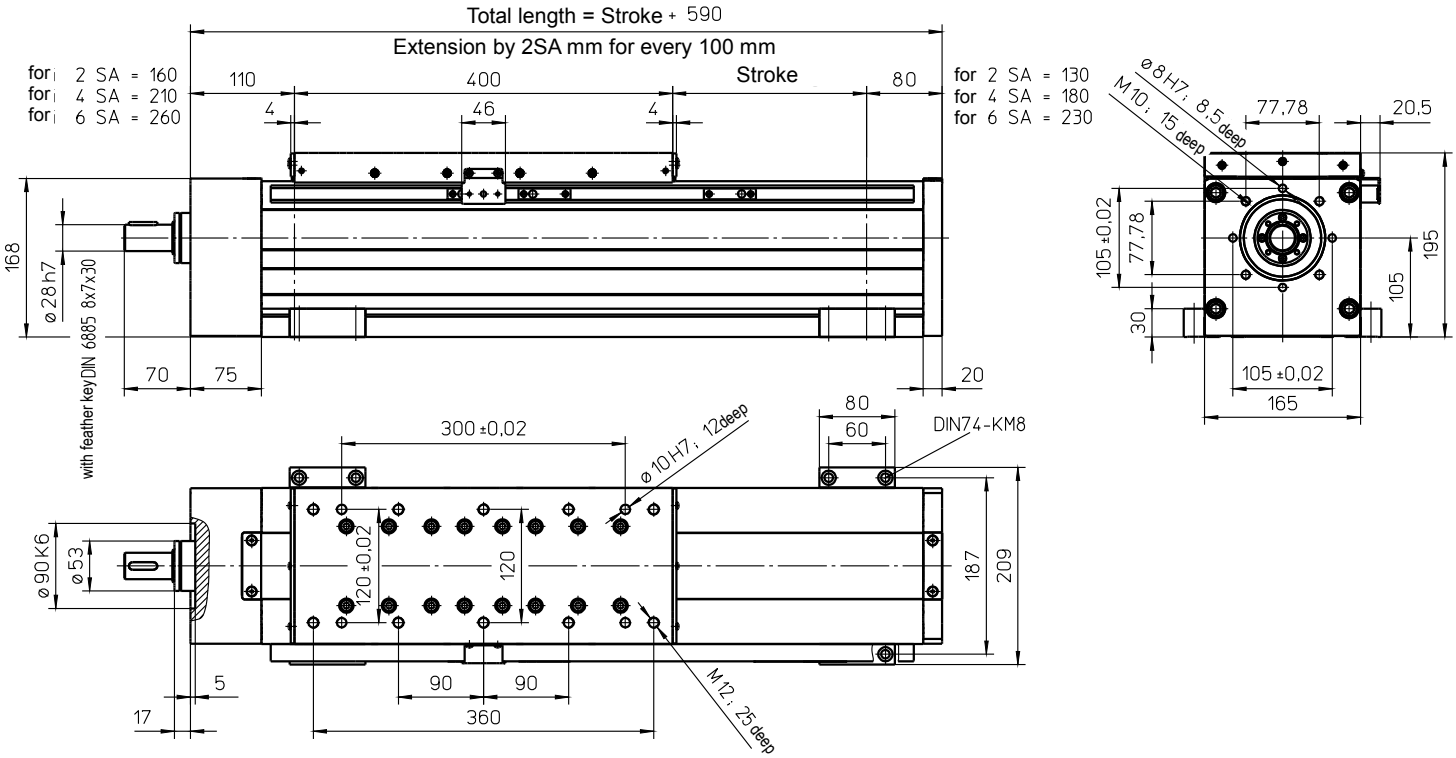

Weights	SGV
Basic length without stroke:	34.00 kg
100 mm stroke:	3.75 kg
Entire carriage 400 mm:	10.80 kg
Max. total length: (longer on request)	5600 mm

Technical Data	SGV
Max. total speed:	1.00 m/s
Max. acceleration:	20 m/s²
Repeat accuracy:	± 0.03 mm (KGT)
Idle torque:	3.20 Nm

Forces and moments

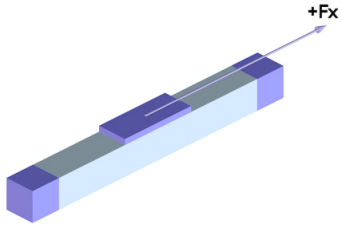

	SGV
Forces	Dynamic [N]
F_X	25000
F_Y	-
F_Z	-
$-F_Z$	-
Moments	Dynamic [Nm]
M_X	-
M_Y	-
M_Z	-

" -" => Must have an external guide.

Drive element	KGT
Max. rotation speed:	3000 min^{-1}
Diameter:	50 mm
Pitch:	10 / 20 mm
Moment of inertia:	3.70 •10^{-3} kgm²/m

Spindle support (SA)

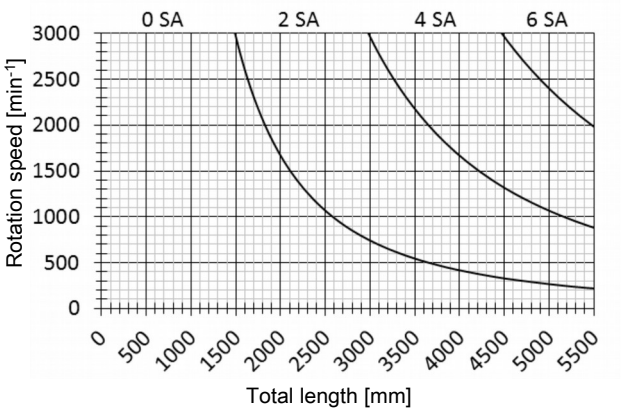

Special design: Spindle support with damping ring (extension of total length: 10 mm for every 2 SA)

with ball screw (KGT) and rail guide (SSF)

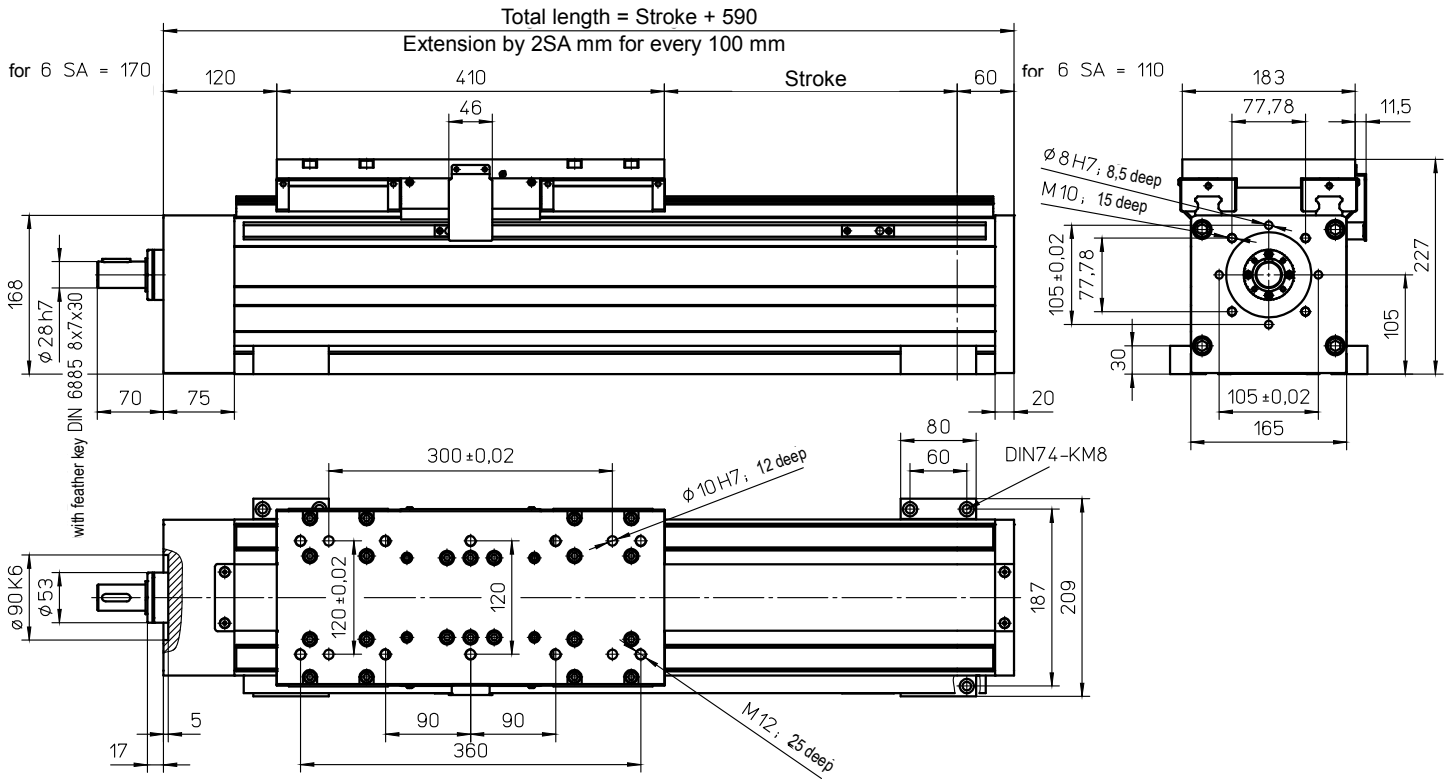

Weights	SSF
Basic length without stroke:	38.90 kg
100 mm stroke:	4.40 kg
Entire carriage 410 mm:	25.20 kg
Max. total length:	5600 mm
(longer on request)	

Technical Data	SSF
Max. total speed:	1.00 m/s
Max. acceleration:	20 m/s²
Repeat accuracy:	± 0.03 mm (KGT)
Idle torque:	3.20 Nm

Forces and Moments

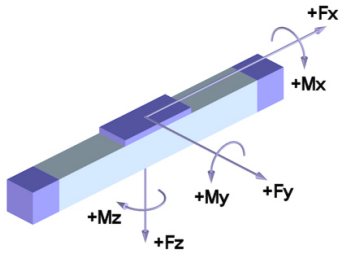

	SSF
Forces	Dynamic [N]
F_X	25000
F_Y	5000
F_Z	15000
$-F_Z$	8000
Moments	Dynamic [Nm]
M_X	800
M_Y	1800
M_Z	1400

Drive element	KGT
Max. rotation speed:	3000 min^{-1}
Diameter:	50 mm
Pitch:	10 / 20 mm
Moment of inertia:	3.70 •10^{-3} kgm²/m

Spindle support (SA)

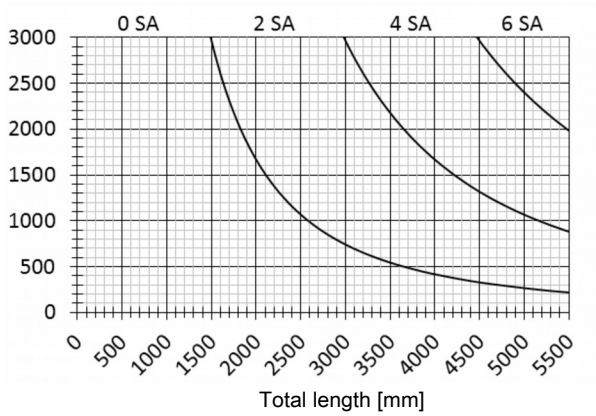

Special design: Spindle support with damping ring (from 4SA: extension of total length: 10 mm for every 2 SA)

Release: 12.12.2016

with toothed belt drive and double linear guide (ZSS)

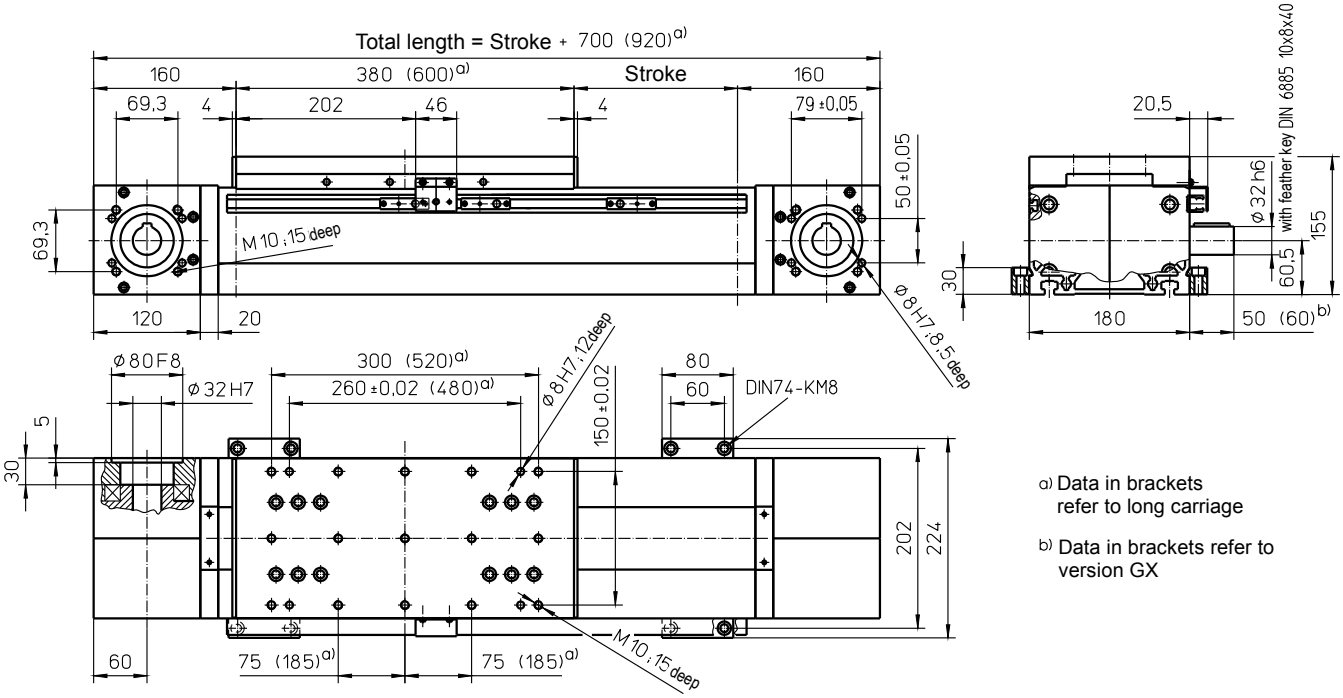

a) Data in brackets refer to long carriage

b) Data in brackets refer to version GX

Weights	ZSS
Basic length without stroke:	37.70 kg
100 mm stroke:	2.40 kg
Entire carriage 380 mm:	11.20 kg
Entire carriage 600 mm:	15.70 kg
Max. total length: (longer on request)	6200 mm

Technical Data	ZSS
Max. speed:	5.00 m/s
Max. acceleration:	60 m/s²
Repeat accuracy:	± 0.08 mm
Idle torque:	8.00 Nm
Moment of inertia:	5.60 •10^{-2} kgm²
Drive element:	Toothed belt **75 AT10**
Stroke per revolution:	320 mm

Forces and moments

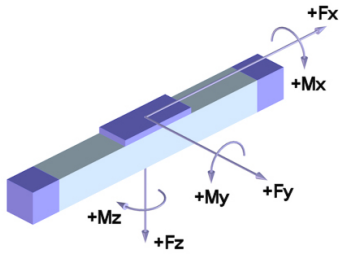

	ZSS
Forces	Dynamic [N]
F_x d)	6000
F_Y	6000
F_Z	12000
$-F_Z$	6000
Moments	Dynamic [Nm]
M_X	1500
M_Y	3000 (4000)
M_Z	1500 (2000)

d) Maximum value (see diagram "F_X-v-Diagram")

Data in brackets refer to long carriage plate (600)

F_X - v - Diagram

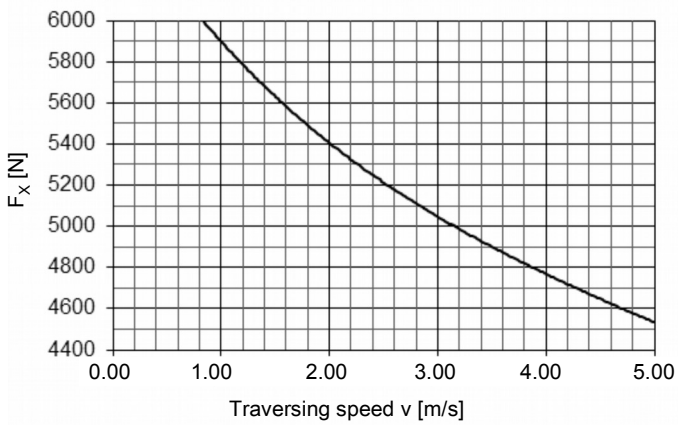

with toothed belt drive and double linear guide (ASS)

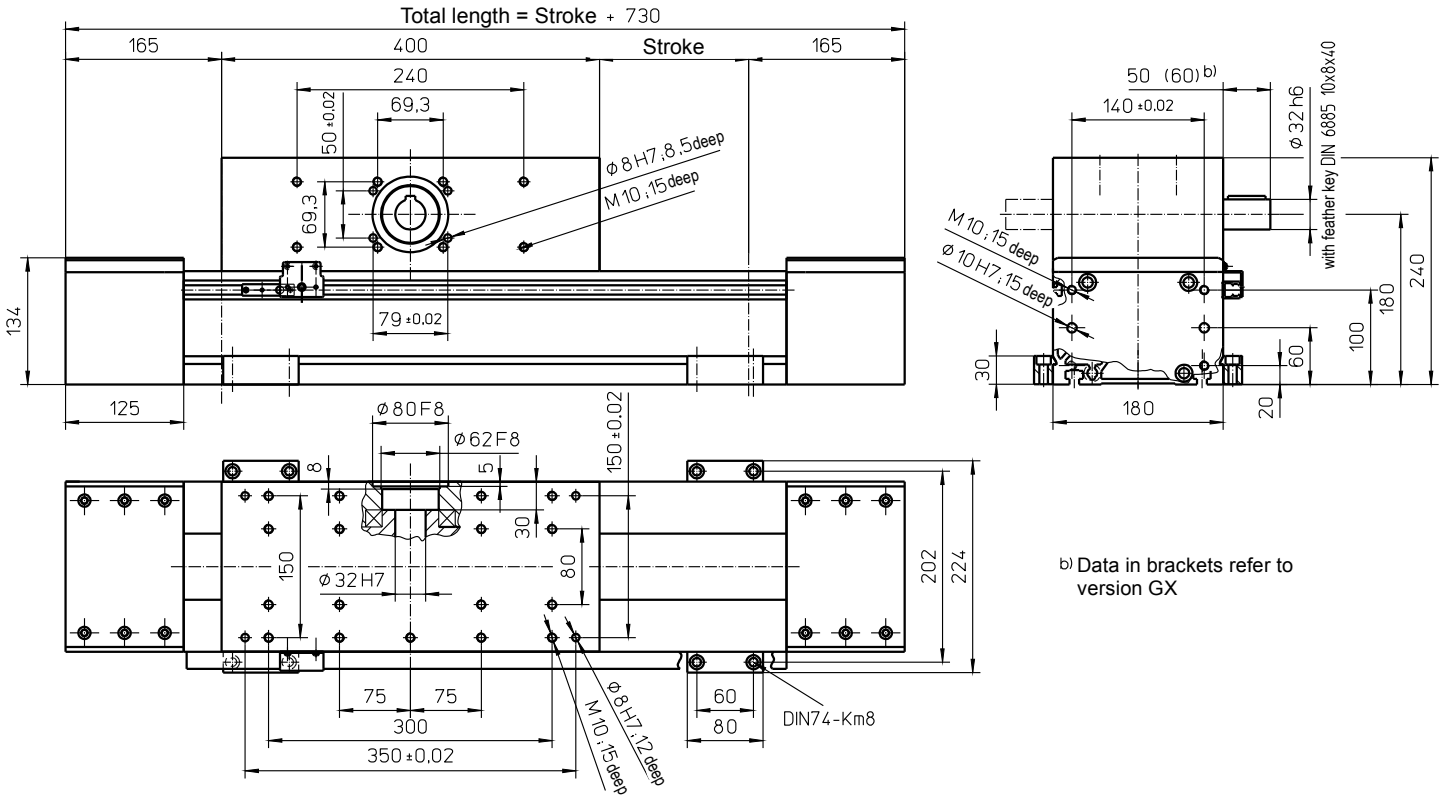

b) Data in brackets refer to version GX

Weights	ASS
Basic length without stroke:	48.90 kg
100 mm stroke:	2.80 kg
Carriage drive 400 mm:	25.60 kg
Max. total length: (longer on request)	6200 mm

Technical Data	ASS
Max. speed:	5.00 m/s
Max. acceleration:	60 m/s²
Repeat accuracy:	± 0.08 mm
Idle torque:	8.00 Nm
Moment of inertia:	6.20 •10^{-2} kgm²
Drive element:	Toothed belt **75 AT10**
Stroke per revolution:	320 mm

Forces and moments

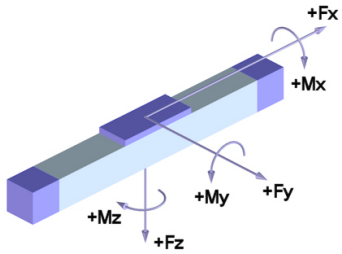

	ASS
Forces	Dynamic [N]
F_x d)	3500
F_Y	6000
F_Z	12000
$-F_Z$	6000
Moments	Dynamic [Nm]
M_X	1500
M_Y	3000
M_Z	1500

d) Maximum value (see diagram "F_X-v-Diagram")

F_X - v - Diagram

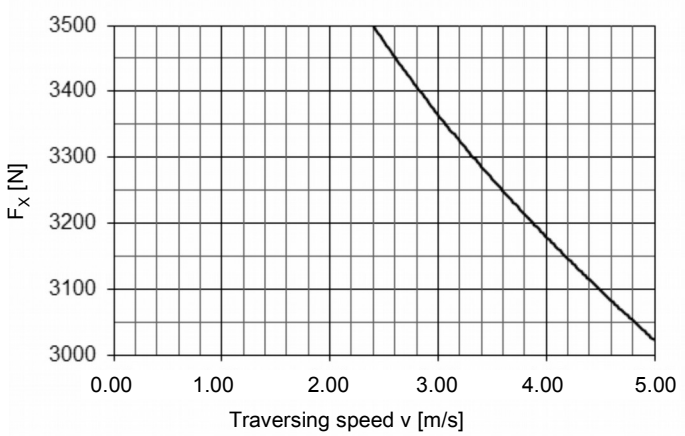

Release: 05.11.2010

Mechanical Linear Drive **Beta 180-SSS**

with ball screw (KGT) and double linear guide (SSS)

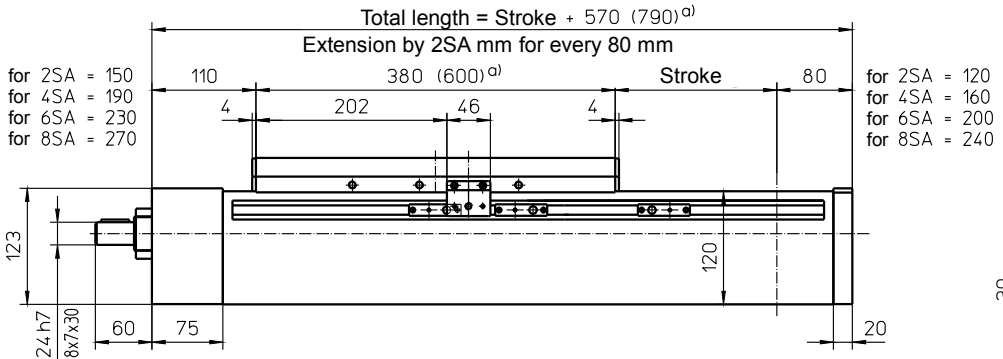

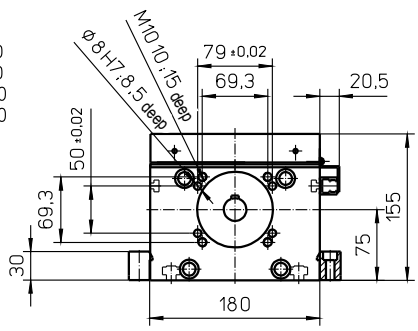

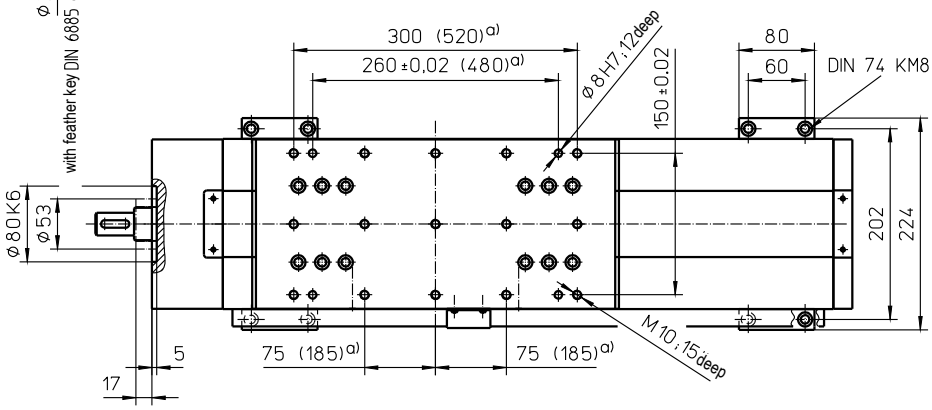

a) Data in brackets refer to long carriage

Weights	SSS
Basic length without stroke:	33.50 kg
100 mm stroke:	2.80 kg
Entire carriage 380 mm:	10.80 kg
Entire carriage 600 mm:	15.50 kg
Max. total length: (longer on request)	5600 mm

Technical Data	SSS
Max. speed:	3.00 m/s
Max. acceleration:	20 m/s²
Repeat accuracy:	± 0.03 mm (KGT)
Idle torque:	2.50 Nm

Forces and moments

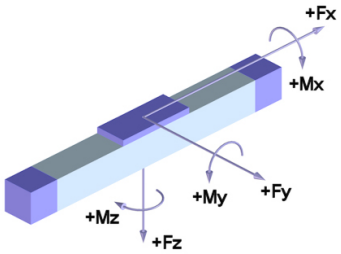

	SSS
Forces	Dynamic [N]
F_X	12000
F_Y	6000
F_Z	12000
$-F_Z$	6000
Moments	Dynamic [Nm]
M_X	1500
M_Y	3000 (4000)
M_Z	1500 (2000)

Data in brackets refer to long carriage plate (600)

Drive element	KGT
Max. rotation speed:	3000 min^{-1}
Diameter:	32 mm
Pitch:	5 / 10 / 20 / 40 / 60 mm
Moment of inertia:	6.45 $\cdot 10^{-4}$ kgm²/m

Spindle support (SA)

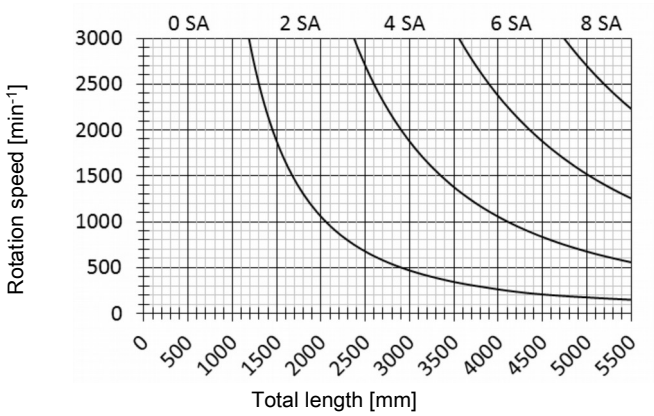

Special design: Spindle support with damping ring (extension of total length: 10 mm for every 2 SA)

with toothed belt drive and double linear guide (ZSS)

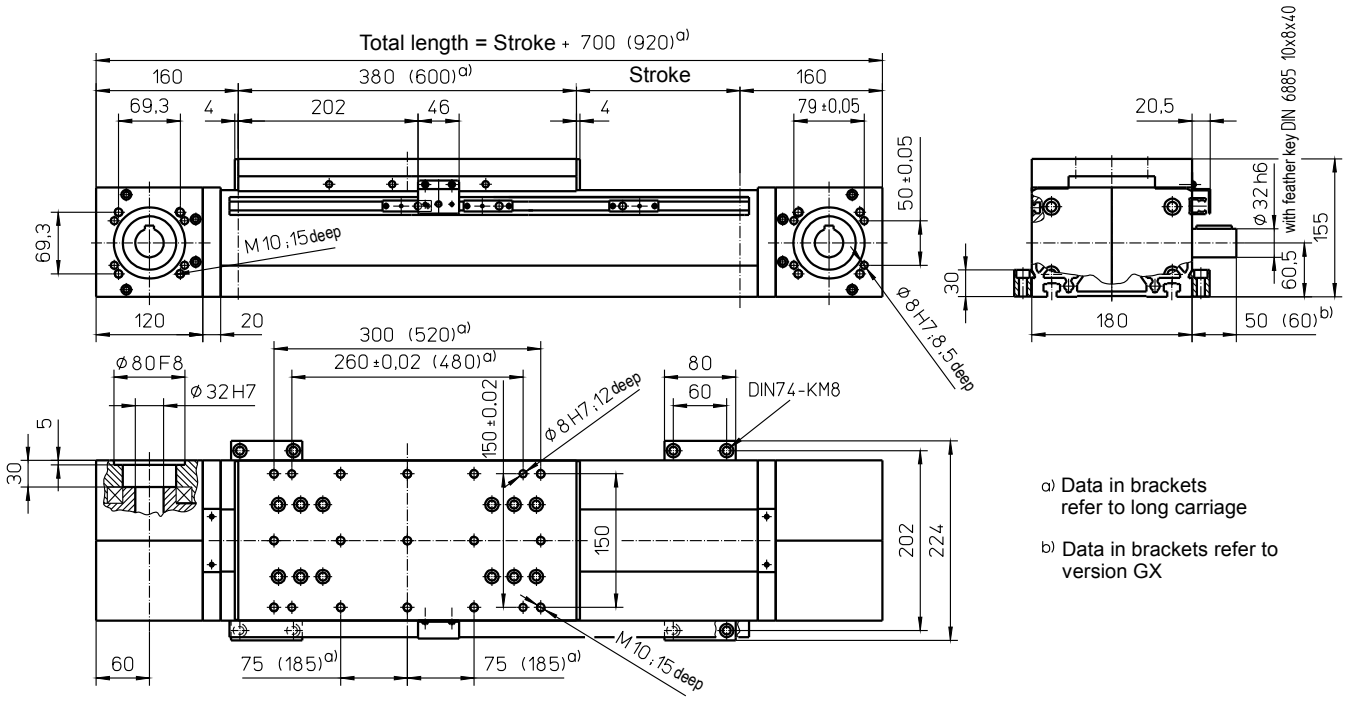

a) Data in brackets refer to long carriage

b) Data in brackets refer to version GX

Weights	ZSS
Basic length without stroke:	39.70 kg
100 mm stroke:	2.60 kg
Entire carriage 380 mm:	14.65 kg
Entire carriage 600 mm:	15.75 kg
Max. total length: (longer on request)	6200 mm

Technical Data	ZSS
Max. speed:	5.00 m/s
Max. acceleration:	60 m/s²
Repeat accuracy:	± 0.08 mm
Idle torque:	8.00 Nm
Moment of inertia:	4.65 •10^{-2} kgm²
Drive element:	Toothed belt **75 AT10**
Stroke per revolution:	320 mm

Forces and moments

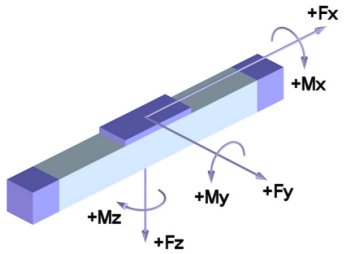

	ZSS
Forces	Dynamic [N]
F_X d)	6000
F_Y	8000
F_Z	15000
$-F_Z$	8000
Moments	Dynamic [Nm]
M_X	1800
M_Y	3600 (4800)
M_Z	1800 (2400)

d) Maximum value (see diagram "F_X-v-Diagram")

Data in brackets refer to long carriage plate (600)

F_X - v - Diagram

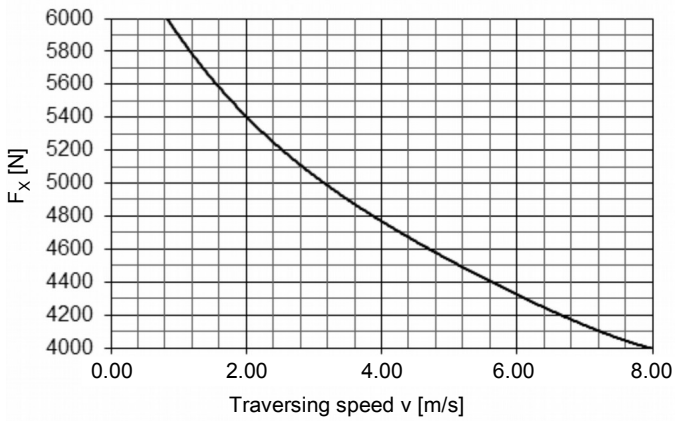

with toothed belt drive and double linear guide (ASS)

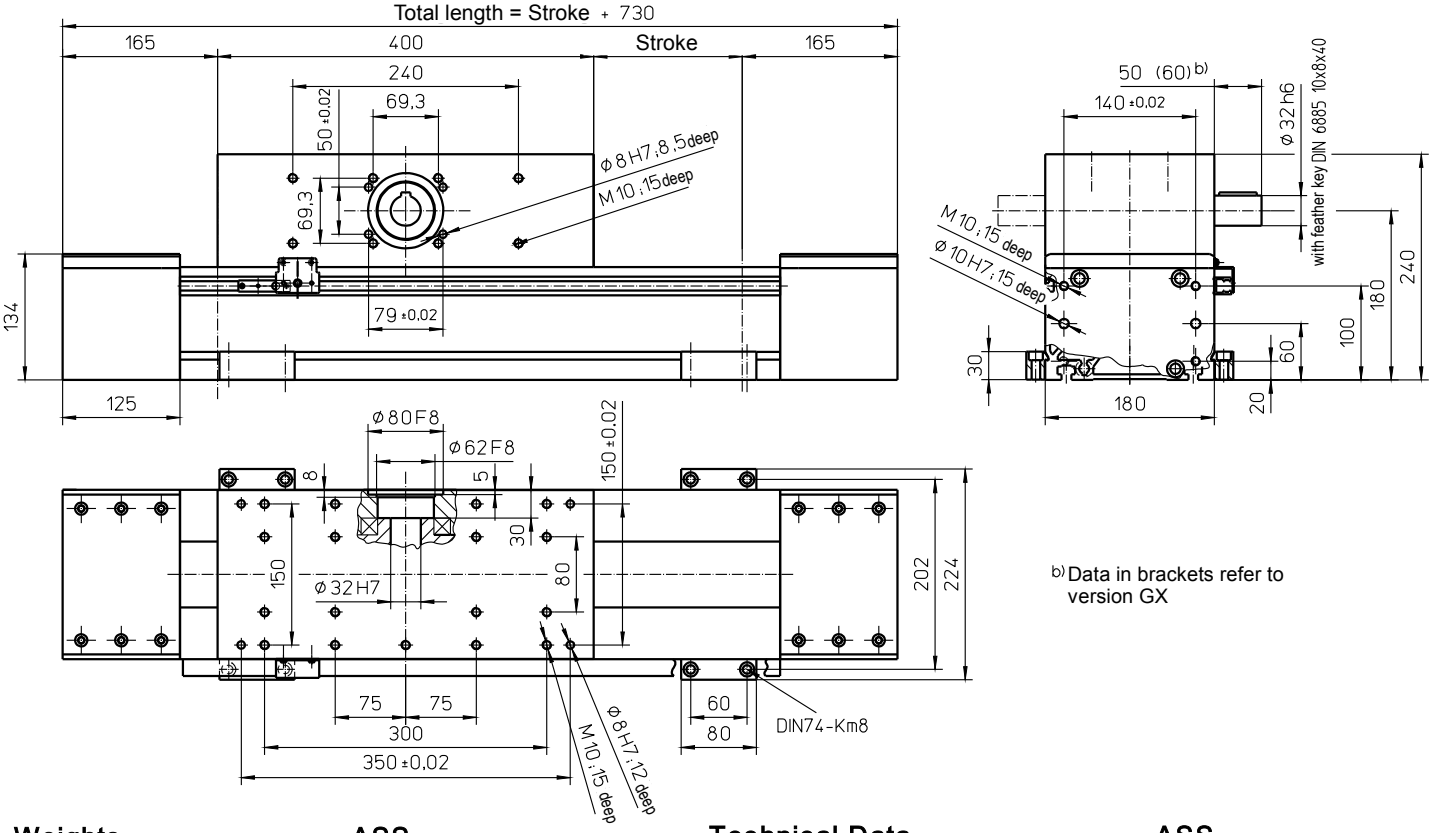

b) Data in brackets refer to version GX

Weights	ASS
Basic length without stroke:	51.50 kg
100 mm stroke:	3.60 kg
Carriage drive 400 mm:	27.35 kg
Max. total length: (longer on request)	6200 mm

Technical Data	ASS
Max. speed:	5.00 m/s
Max. acceleration:	60 m/s²
Repeat accuracy:	± 0.08 mm
Idle torque:	8.00 Nm
Moment of inertia:	7.75 •10^{-2} kgm²
Drive element:	Toothed belt **75 AT10**
Stroke per revolution:	320 mm

Forces and moments

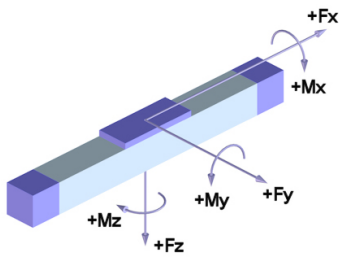

	ASS
Forces	Dynamic [N]
F_X d)	3500
F_Y	8000
F_Z	15000
$-F_Z$	8000
Moments	Dynamic [Nm]
M_X	1800
M_Y	3600 (4800)
M_Z	1800 (2400)

d) Maximum value (see diagram "F_X-v-Diagram")

F_X - v - Diagram

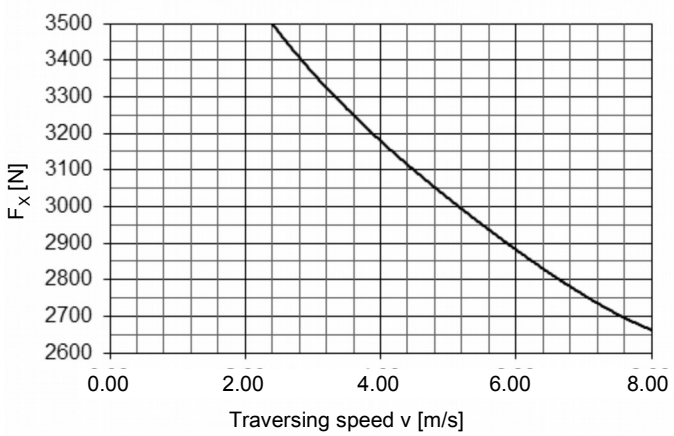

For mechanical linear drives with roller guide, the static load rating "C_{stat}" applies for static loads.

with ball screw (KGT) and double linear guide (SSS)

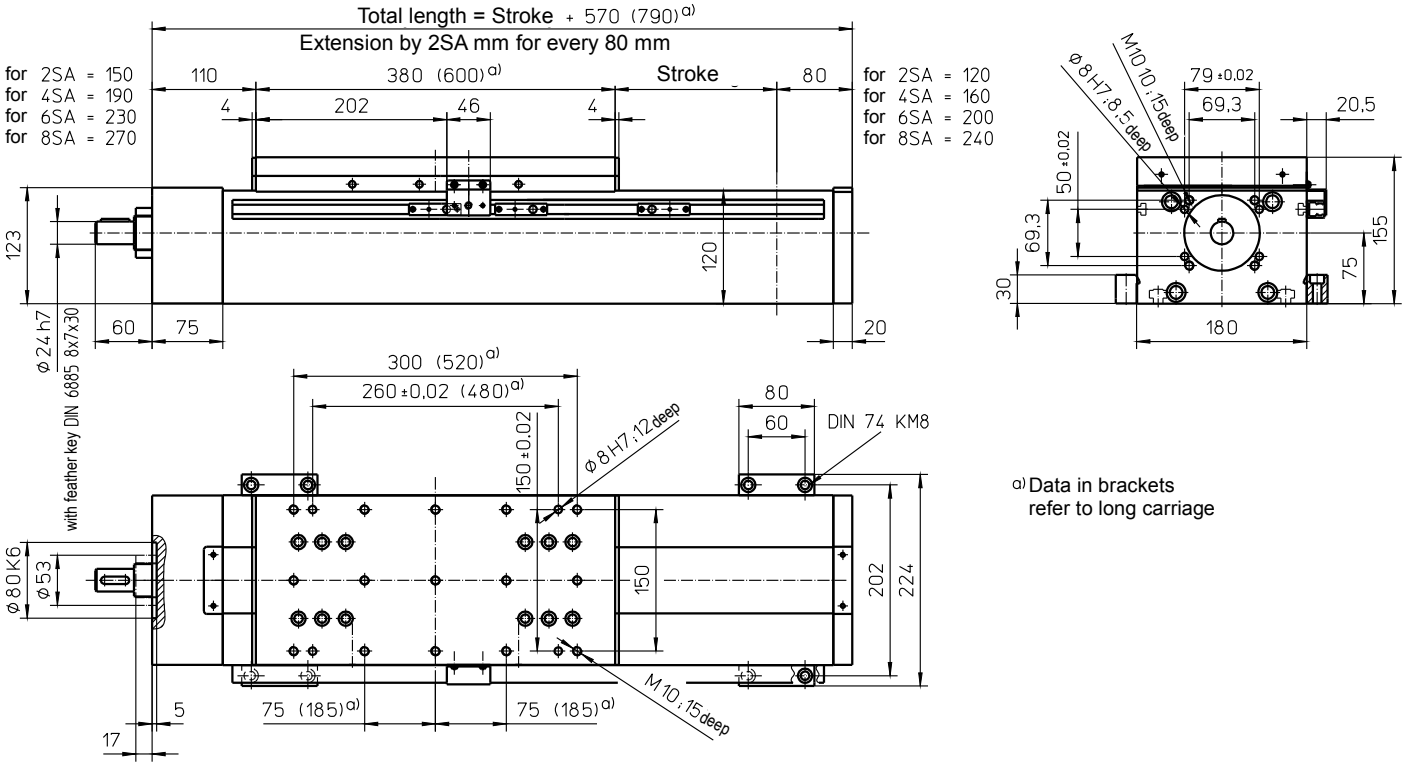

a) Data in brackets refer to long carriage

Weights	SSS
Basic length without stroke:	37.00 kg
100 mm stroke:	3.00 kg
Entire carriage drive 380 mm:	14.30 kg
Entire carriage drive 600 mm:	15.40 kg
Max. total length: (longer on request)	5600 mm

Technical Data	SSS
Max. total speed:	3.00 m/s
Max. acceleration:	20 m/s²
Repeat accuracy:	± 0.03 mm (KGT)
Idle torque:	2.50 Nm

Forces and moments

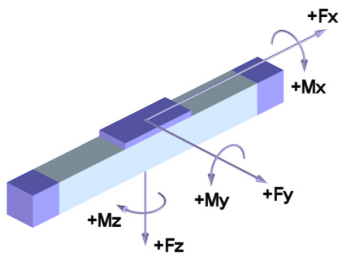

	SSS
Forces	Dynamic [N]
F_X d)	12000
F_Y	8000
F_Z	15000
$-F_Z$	8000
Moments	Dynamic [Nm]
M_X	1800
M_Y	3600 (4800)
M_Z	1800 (2400)

Data in brackets refer to long carriage plate (600)

Drive element	KGT
Max. rotation speed:	3000 min^{-1}
Diameter:	32 mm
Pitch:	5 / 10 / 20 / 40 / 60 mm
Moment of inertia:	6.45 $\cdot 10^{-4}$ kgm²/m

Spindle support (SA)

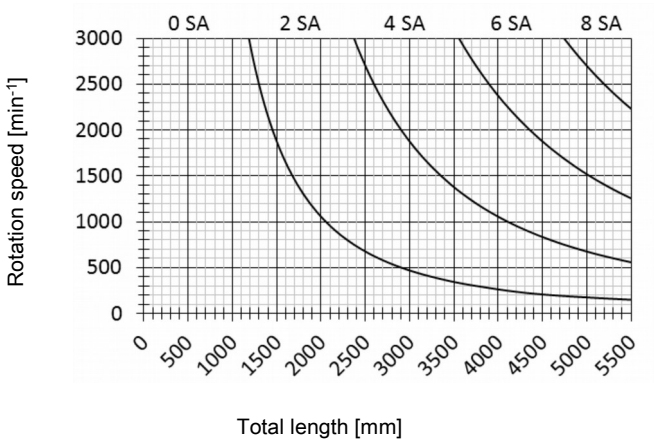

Special design: Spindle support with damping ring (extension of total length: 10 mm for every 2 SA)

Release: 12.12.2016

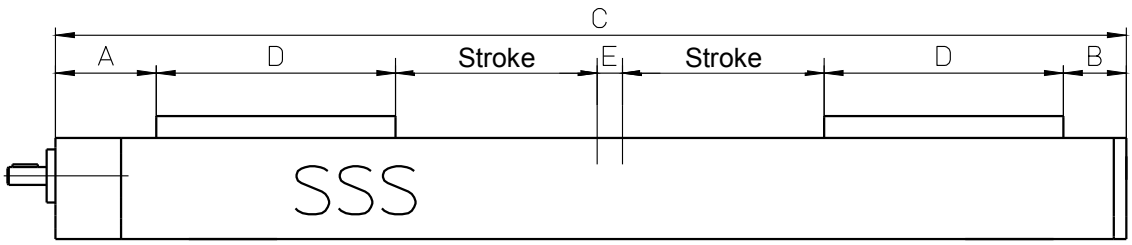

Unit size	A [mm]	B [mm]	Total length C [mm]	D [mm]	E [mm]	Screw drive
Beta 60-SSS	65	35	2 x stroke + 460 (560) [a)] + E 120 mm extension for every 4 SA	180 (230)[a)]	min. 40 [b)] without SA	Tr 20x4 or KGT 2005
Beta 70-C-SRS-SSS	80	50	2 x stroke + 510 (610) [a)] + E 80 mm extension for every 4 SA	190 (240)[a)]	min. 30 without SA	Tr 16x4
Beta 80-SRS-SSS	105	65	2 x stroke + 590 (710)[a)] + E 100 mm extension for every 4 SA	210 (270)[a)]	min. 30 without SA	Tr 20x4 or KGT 2005

For detailed measurements, see main data sheet for respective size (version).

[a)] Data in brackets apply to long carriage plate.

[b)] Value applies to guide Bosch-Rexroth. For guide THK applies value 30.

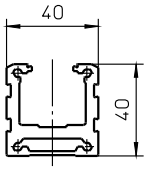

Profile Beta 40

Specific mass [kg/m]	1.71
Surface measure [mm²]	635
Geometrical moment of inertia Iy [mm⁴]	88917
Geometrical moment of inertia Iz [mm⁴]	133350
Section modulus Wy [mm³]	3757
Section modulus Wz [mm³]	6665

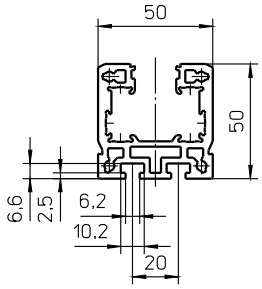

Profile Beta 50-C

Specific mass [kg/m]	2.45
Surface measure [mm²]	908
Geometrical moment of inertia Iy [mm⁴]	236683
Geometrical moment of inertia Iz [mm⁴]	295187
Section modulus Wy [mm³]	8622
Section modulus Wz [mm³]	11804

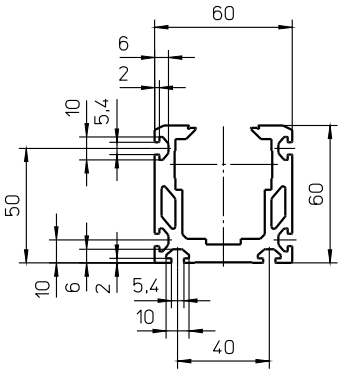

Profile Beta 60-SGV-SSS

Specific mass [kg/m]	3.35
Surface measure [mm²]	1242
Geometrical moment of inertia Iy [mm⁴]	473055
Geometrical moment of inertia Iz [mm⁴]	577258
Section modulus Wy [mm³]	13624
Section modulus Wz [mm³]	19236

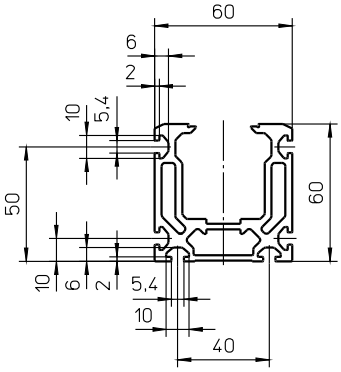

Profile Beta 60-ZSS

Specific mass [kg/m]	3.02
Surface measure [mm²]	1117
Geometrical moment of inertia Iy [mm⁴]	400283
Geometrical moment of inertia Iz [mm⁴]	521983
Section modulus Wy [mm³]	11929
Section modulus Wz [mm³]	17380

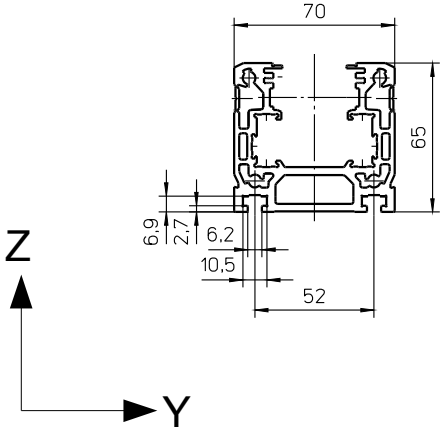

Profile Beta 70-C-ZRS-SRS

Specific mass [kg/m]	3.70
Surface measure [mm²]	1370
Geometrical moment of inertia Iy [mm⁴]	585283
Geometrical moment of inertia Iz [mm⁴]	854713
Section modulus Wy [mm³]	15835
Section modulus Wz [mm³]	24410

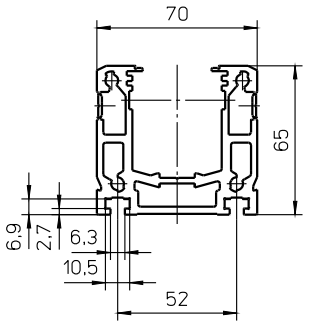

Profile Beta 70-C-ZSS-SSS

Specific mass [kg/m]	3.70
Surface measure [mm ^{2}]	1370
Geometrical moment of inertia Iy [mm^4]	563059
Geometrical moment of inertia Iz [mm^4]	852507
Section modulus Wy [mm³]	14743
Section modulus Wz [mm³]	24335

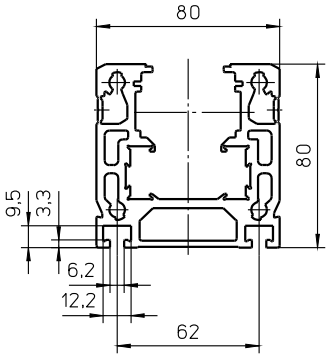

Profile Beta 80-ZRS-SRS

Specific mass [kg/m]	5.64
Surface measure [mm²]	2090
Geometrical moment of inertia Iy [mm^4]	1294343
Geometrical moment of inertia Iz [mm^4]	1732340
Section modulus Wy [mm³]	30263
Section modulus Wz [mm³]	43258

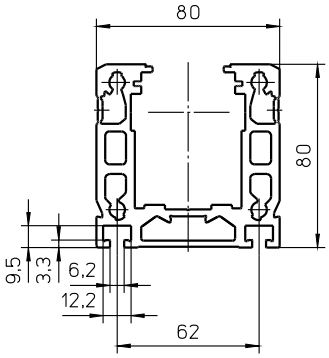

Profile Beta 80-ZSS

Specific mass [kg/m]	5.40
Surface measure [mm²]	2000
Geometrical moment of inertia Iy [mm^4]	1303940
Geometrical moment of inertia Iz [mm^4]	1680598
Section modulus Wy [mm³]	29397
Section modulus Wz [mm³]	41895

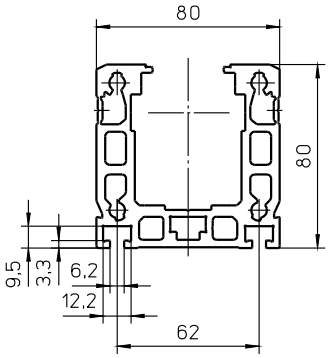

Profile Beta 80-SSS

Specific mass [kg/m]	5.60
Surface measure [mm²]	2057
Geometrical moment of inertia Iy [mm^4]	1372019
Geometrical moment of inertia Iz [mm^4]	1677956
Section modulus Wy [mm³]	30572
Section modulus Wz [mm³]	41846

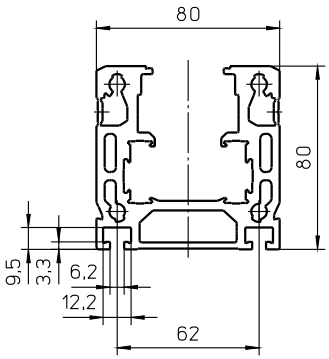

Profile Beta 80-C-ZRS

Specific mass [kg/m]	5.82
Surface measure [mm²]	2156
Geometrical moment of inertia Iy [mm^4]	1330724
Geometrical moment of inertia Iz [mm^4]	1979149
Section modulus Wy [mm³]	31767
Section modulus Wz [mm³]	44843

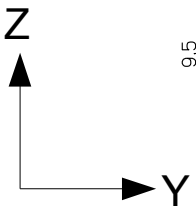

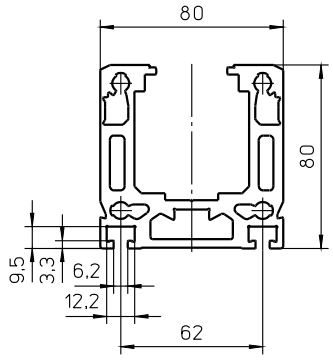

Profile Beta 80-C-ZSS

Specific mass [kg/m]	5.92
Surface measure [mm²]	2191
Geometrical moment of inertia Iy [mm⁴]	1376276
Geometrical moment of inertia Iz [mm⁴]	1772609
Section modulus Wy [mm³]	30375
Section modulus Wz [mm³]	44315

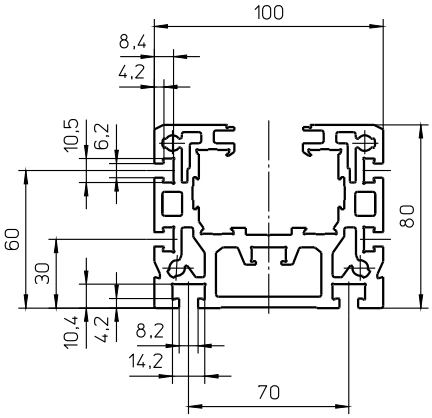

Profile Beta 100

Specific mass [kg/m]	7.97
Surface measure [mm²]	2950
Geometrical moment of inertia Iy [mm⁴]	1782959
Geometrical moment of inertia Iz [mm⁴]	3507213
Section modulus Wy [mm³]	40598
Section modulus Wz [mm³]	70137

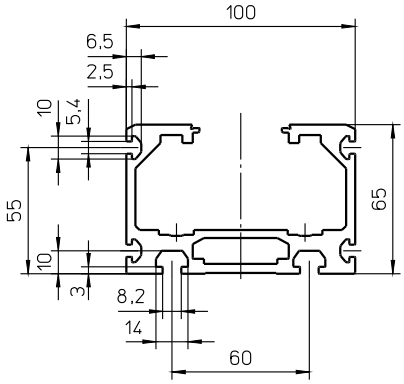

Profile Beta 100-D

Specific mass [kg/m]	4.87
Surface measure [mm²]	1804
Geometrical moment of inertia Iy [mm⁴]	917779
Geometrical moment of inertia Iz [mm⁴]	2328911
Section modulus Wy [mm³]	23869
Section modulus Wz [mm³]	46578

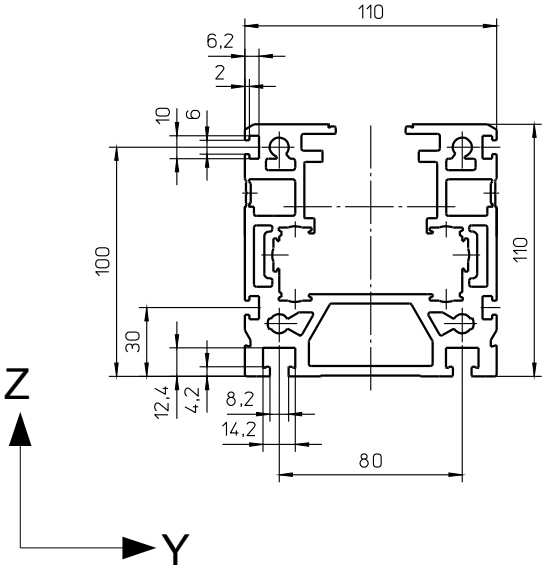

Profile Beta 110-ZRS-SRS

Specific mass [kg/m]	10.69
Surface measure [mm²]	3961
Geometrical moment of inertia Iy [mm⁴]	5114812
Geometrical moment of inertia Iz [mm⁴]	6177042
Section modulus Wy [mm³]	87307
Section modulus Wz [mm³]	111528

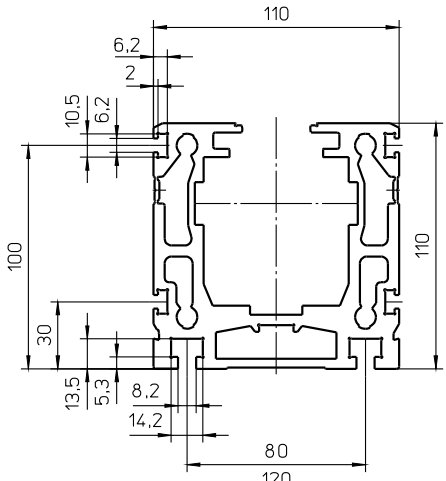

Profile Beta 110-ZSS-SSS/ 110-C-SGV

Specific mass [kg/m]	10.54
Surface measure [mm²]	3902
Geometrical moment of inertia Iy [mm⁴]	4974348
Geometrical moment of inertia Iz [mm⁴]	5898662
Section modulus Wy [mm³]	79469
Section modulus Wz [mm³]	106973

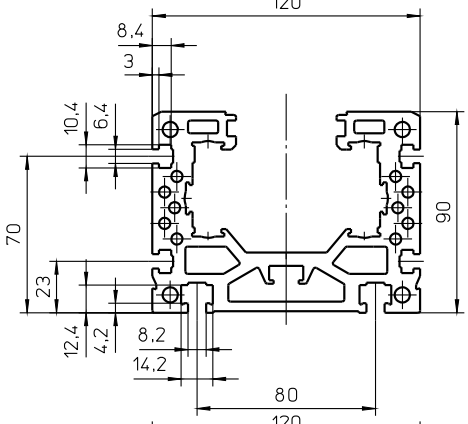

Profile Beta 120

Specific mass [kg/m]	10.47
Surface measure [mm²]	3876
Geometrical moment of inertia Iy [mm⁴]	3095671
Geometrical moment of inertia Iz [mm⁴]	7114115
Section modulus Wy [mm³]	62753
Section modulus Wz [mm³]	118478

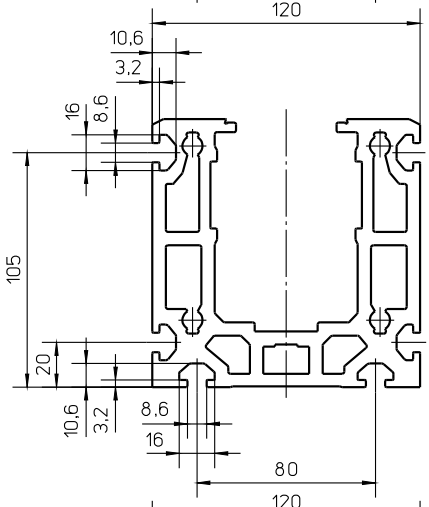

Profile Beta 120-C-SSS

Specific mass [kg/m]	13.24
Surface measure [mm²]	4902
Geometrical moment of inertia Iy [mm⁴]	7217779
Geometrical moment of inertia Iz [mm⁴]	8754150
Section modulus Wy [mm³]	104573
Section modulus Wz [mm³]	145902

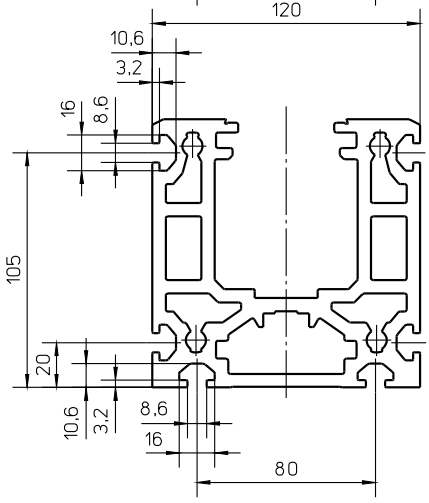

Profile Beta 120-C-ZSS

Specific mass [kg/m]	13.77
Surface measure [mm²]	5100
Geometrical moment of inertia Iy [mm⁴]	7149181
Geometrical moment of inertia Iz [mm⁴]	8947351
Section modulus Wy [mm³]	109336
Section modulus Wz [mm³]	149123

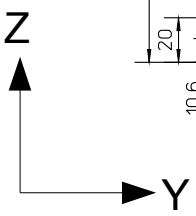

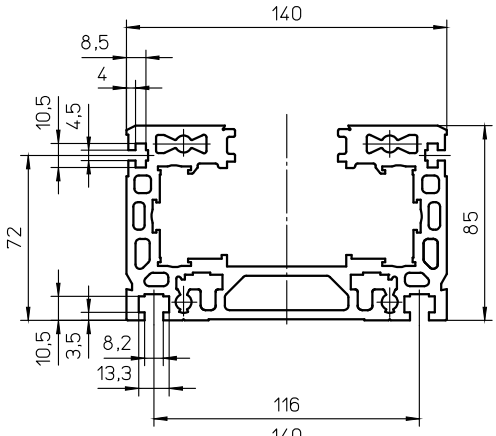

Profile Beta 140

Specific mass [kg/m]	10.68
Surface measure [mm²]	3955
Geometrical moment of inertia Iy [mm⁴]	3159202
Geometrical moment of inertia Iz [mm⁴]	9975915
Section modulus Wy [mm³]	69334
Section modulus Wz [mm³]	184852

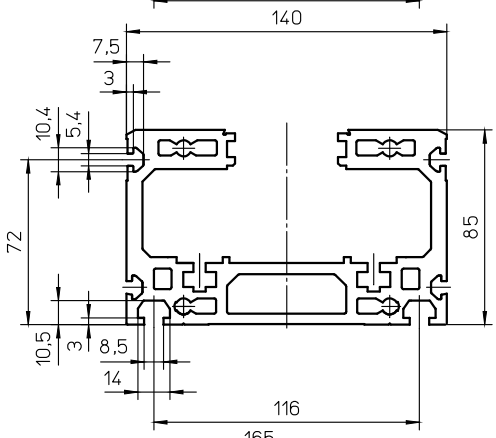

Profile Beta 140-C

Specific mass [kg/m]	10.11
Surface measure [mm²]	3743
Geometrical moment of inertia Iy [mm⁴]	3127894
Geometrical moment of inertia Iz [mm⁴]	9071334
Section modulus Wy [mm³]	67067
Section modulus Wz [mm³]	129589

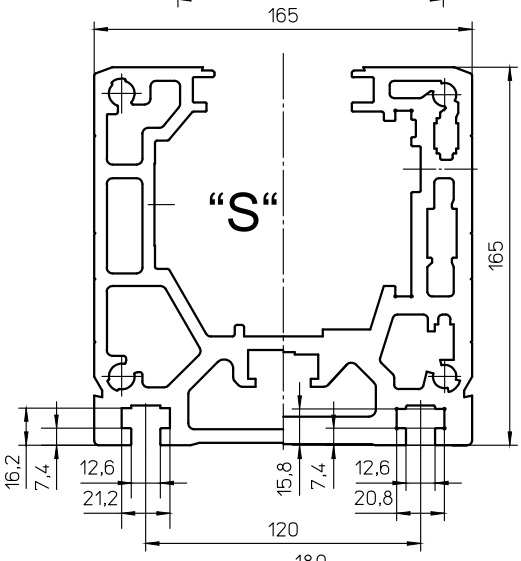

Profile Beta 165 (-C)

	"S"	
Specific mass [kg/m]	19,95	25,13
Surface measure [mm²]	7388	9308
Geometrical moment of inertia Iy [mm⁴]	21396126	25391136
Geometrical moment of inertia Iz [mm⁴]	25983180	31673479
Section modulus Wy [mm³]	228529	264686
Section modulus Wz [mm³]	314947	383919

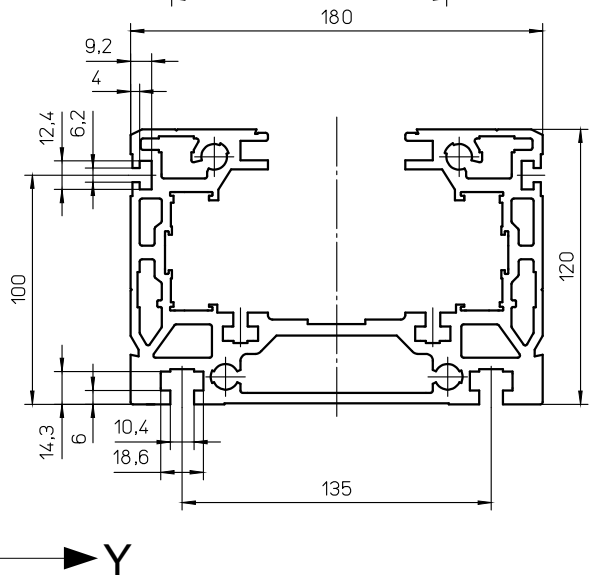

Profile Beta 180 (-C)

Specific mass [kg/m]	15,85
Surface measure [mm²]	5870
Geometrical moment of inertia Iy [mm⁴]	9351063
Geometrical moment of inertia Iz [mm⁴]	24300411
Section modulus Wy [mm³]	137689
Section modulus Wz [mm³]	269902

Sliding blocks **(NS)** and mounting brackets **(BL)**

NS 1 - 7 / 11

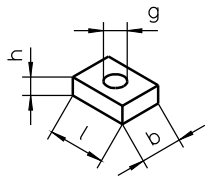

NS 4.1 / 10

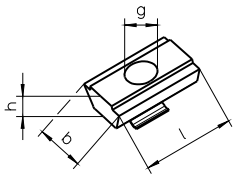

NS 8 / 9 / 12 -14

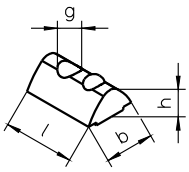

RM 2 / 4 / 6

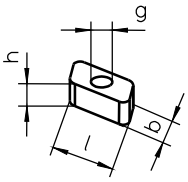

Linear drive	Page*	NS	ID No.	l [mm]	b [mm]	h [mm]	g
Beta 40	C and D	7	12649	16	5.9	1.5	M3
Beta 50-C	E	2	10557	16	10	4	M5
		RM2	15370	10	6	4	M4
Beta 60	C, D and E	8	14644	12	8	4.5	M5
		9	14652	12	8	4.5	M4
		12	16280	12	8	4.5	M3
Beta 70-C	E	2	10557	16	10	4	M5
		RM2	15370	10	6	4	M4
Beta 80(-C)	E	3	10558	20	12	5	M6
		RM4	15371	13	8	6	M5
Beta 100	E	4	10559	18	14	6	M8
		4.1	16552	20	13	6	M8
		10	16499	20	13	6	M6
		RM4	15371	13	8	6	M5
	C and D	1	10556	12	10	4	M4
		2	10557	16	10	4	M5
		RM2	15370	10	6	4	M4
Beta 100-D Beta 140-C	E	4.1	16552	20	13	6	M8
		10	16499	20	13	6	M6
	C and D	8	14644	12	8	4.5	M5
		9	14652	12	8	4.5	M4
		12	16280	12	8	4.5	M3
Beta 110(-C)	E	4.1	16552	20	13	6	M8
		5	10560	20	14	8	M8
		10	16499	20	13	6	M6
		RM6	15372	18	10	8	M6
	C and D	1	10556	12	10	4	M4
		2	10557	16	10	4	M5
		11	13510	12	10	3.5	M4
		RM2	15370	10	6	4	M4
Beta 120	E	4.1	16552	20	13	6	M8
		5	10560	20	14	8	M8
		10	16499	20	13	6	M6
		RM6	15372	18	10	8	M6
	C and D	1	10556	12	10	4	M4
		2	10557	16	10	4	M5
		RM2	15370	10	6	4	M4
Beta 120-C	C, D and E	14	18481	22	13,5	7,6	M8
		13	18479	22	13,5	7,6	M4
Beta 140	E	3	10558	20	12	5	M6
		4.1	16552	20	13	6	M8
		10	16499	20	13	6	M6
		RM4	15371	13	8	6	M5
	C and D	1	10556	12	10	4	M4
		RM2	15370	10	6	4	M4
Beta 165(-C)	E	6	10561	25	18	8	M10
		RM6	15372	18	10	8	M6
Beta 180(-C)	E	6	10561	25	18	8	M10
		RM6	15372	18	10	8	M6
	C and D	3	10558	20	12	5	M6
		RM2	15370	10	6	4	M4

BL 1..7

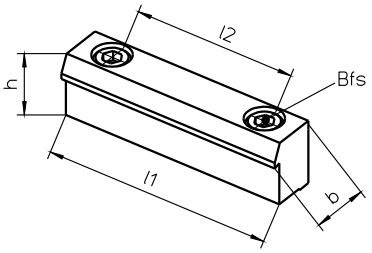

Linear drive	BL	ID No.	l1 [mm]	l2 [mm]	b [mm]	h [mm]	Bfs
Beta 40	1	10552	70	50	15	17,5	M6
Beta 50-C	1	10552	70	50	15	17,5	M6
Beta 60	5	14489	70	50	15	13	M6
Beta 70	1	10552	70	50	15	17,5	M6
Beta 80(-C)	2	10553	70	50	15	20	M6
Beta 100	2	10553	70	50	15	20	M6
Beta 100-D	5	14489	70	50	15	13	M6
Beta 110(-C)	2	10553	70	50	15	20	M6
Beta 120	1	10552	70	50	15	17,5	M6
Beta 120-C	7	18430	70	50	16	25	M6
Beta 140	6	11551	70	50	15	20	M6
Beta 140-C	2	10553	70	50	15	20	M6
Beta 165(-C)	3	10554	80	60	25	30	M8
Beta 180(-C)	3	10554	80	60	25	30	M8

* For further information on page C – E, see catalogue page Z1

Bfs = Mounting screw DIN 912 / ISO 4762

Ordering code for **Toothed Belt Drive**

Example: **Beta** 80-ZRS-32 AT5-E-220-1000-1420-AK-AZ1-1

Product

Size (version*)

Drive

Z = Toothed belt drive
0 = Without drive
A = Powered carriage

Guide system

R = Roller guide
S = Rail guide
G = Sliding guide
0 = Without guide

Model

S = Standard

Drive specifications

Width and type of toothed belt

Stroke per revolution

Stroke

Total length

Cover

AK = Cover band (Note: Total length is greater for Beta 80 and Beta 100)

Accessories

BL = Mounting bracket
EMS / EMB = Mechanical limit switch (S = Siemens, B = Balluff) fitted
EO2 / EO10 = Inductive limit switch NC with 2 m / 10 m cable fitted
ES2 / ES10 = Inductive limit switch NO with 2 m / 10 m cable fitted
NS ① .. ⑭ = Sliding block ① .. ⑭ (See Table on **page B50**)
AZ1 = Drive shaft short, mounting side **C**
AZ1-GX = Drive shaft long without feather key groove, mounting side **C**
AZ2 = Drive shaft short, mounting side **D**
AZ2-GX = Drive shaft long without feather key groove, mounting side **D**
AZ6 = Drive shaft short, mounting side **C** and **D**
AZ6-GX/C = Drive shaft short, mounting side **D** and
Drive shaft long without feather key groove, mounting side **C**
AZ6-GX/D = Drive shaft short, mounting side **C** and
Drive shaft long without feather key groove, mounting side **D**
Further arrangements for drive shaft, see **page Z1**
AZx-S = Drive shaft special (x=1 side **C**, x=2 side **D**, x=6 side **C** und **D**)

Special design

0 = Standard
1 = Special (add specification description)

Further accessories (separate position)

MGK = Motor mounting and coupling (according to dimension sheet)
URT = Deflection belt drive (according to dimension sheet)
* e.g. Beta 80-ZSS or Beta 80-C-ZSS

Release: 24.11.2016

Ordering code for **Mechanical Linear Drive with Spindle Drive**

Example: **Beta** 80-SRS-M-2020-1000-1430-2SA-2ES2-0

Product

Size (version*)

Drive

S = Spindle
0 = Without drive

Guide system

R = Roller guide
S = Rail guide
G = (Auxiliary) sliding guide
0 = Without guide

Model

S = Standard
V = Feed axis
F = Guide outside

Type of drive

M = Single nut (ball screw)
MM = Double nut (ball screw)
(TR = Trapezoidal nut - optional)

Drive specifications

Diameter and pitch (ball screw)
(Diameter x pitch (trapezoidal screw) - optional)

Stroke

Total length

Spindle support (SA)

(quantity)

Accessories

BL = Mounting bracket
EMS / EMB = Mechanical limit switch (S = Siemens, B = Balluff) fitted
EO2 / EO10 = Inductive limit switch NC with 2m / 10m cable fitted
ES2 / ES10 = Inductive limit switch NO with 2m / 10m cable fitted
NS ① .. ⑭ = Sliding block ① .. ⑭ (see Table on page **B50**)

Special design

0 = Standard
1 = Special (add specification description)

Further accessories (separate position)

MGK = Motor mounting and coupling (according to dimension sheet)
URT = Deflection belt drive (according to dimension sheet)
KRG = Bevel gear directly mounted

For mounting of limit switches and lubrication points, see page **Z1**
Cover band comes as standard for screw drive
Further drives available on request:
MK or TK (= single nut made of plastic), KK (= double nut made of plastic)

* e.g. Beta 70-A-SRS or Beta 70-C-SRS